EASYPOOL SMART 02

Water sampling station for private swimming pool applications

EN 01

Operating Manual

Read this operating manual before start-up!

To be retained for future reference.

Dosing | *Liquids*
Conveying | *Gases*
Control | *Systems*

Dear Sir or Madam,

We are delighted you have chosen your EASYPOOL SMART 02 water sampling station. For over 50 years the name Jesco has stood for innovative products in dosing technology, measurement and control and water analysis. EASYPOOL SMART 02 continues a successful product line of high quality water sampling stations.

Lutz-Jesco GmbH

Please note:

The water sampling station must be set up by someone with specialist knowledge of swimming pool technology and the bathing water must be disinfected. Contact the engineer responsible for installing your swimming pool if necessary.

To ensure full, unrestricted use of the product it must be handled professionally during set-up, operation and servicing. You should therefore read this operating manual before working on the equipment.

Table of Contents

1. Safety Instructions ... 3
1.1 General ... 3
1.2 Identification of safety instructions in this operating manual ... 3
1.3 Operators qualification and training ... 3
1.4 Electrical safety tips ... 3
1.5 Hazards due to failure to follow safety instructions ... 3
1.6 Safety-conscious working ... 3
1.7 Safety instructions for the operator ... 3
1.8 Safety instructions for installation, maintenance and inspection ... 4
1.9 Self-made modifications and spares procurement ... 4

2. Before start-up ... 4
2.1 Use for intended purpose ... 4
2.2 Scope of delivery ... 4
2.3 Steps to start-up ... 4

3. Water sampling station ... 5
3.1 Swimming pool water system ... 5
3.2 Versions ... 6
3.3 Dimensioned drawing ... 7
3.4 Water sampling station components ... 7
3.5 Water sampling station technical data ... 7

4. Controller ... 8
4.1 Technical data ... 8
4.2 Product design ... 9
4.3 Terminal diagrams for the main board and technical assemblies ... 10
4.4 Operation and menu structure ... 17
4.5 Measurement value inputs ... 18
4.6 Explanation of digital inputs ... 21
4.7 Control outputs ... 22
4.8 Controllers ... 22
4.9 Alarms ... 24
4.10 Analogue power outputs 0/4 … 20 mA for remote displays ... 25
4.11 Controlling the flocculant pump ... 25
4.12 Service menu ... 25
4.13 Memory card ... 27
4.14 Connecting to the PC ... 27

5. Installation and Commissioning ... 29
5.1 Tools required ... 29
5.2 Wall mount ... 29
5.3 Electrical connection ... 29
5.4 Connection to the pool water circuit ... 29
5.5 Fitting and calibrating sensors ... 31
5.6 Starting automatic mode ... 32

6. Shutdown, Recommissioning and Disposal ... 33

7. Maintenance and Care ... 34
7.1 Regular inspection ... 34
7.2 Annual maintenance ... 34
7.3 Adjusting the flow monitor (insufficient sample water) ... 34
7.4 Peristaltic pump maintenance ... 34

8. Spare parts, Consumables and Accessories ... 35

9. Troubleshooting ... 36
9.1 Troubleshooting and diagnostics ... 36
9.2 Fault resolution ... 37
Device revision ... 37
Index ... 38
CE declaration of conformity ... 41
Declaration of no objection ... 42
Warranty claim ... 43

1. Safety Instructions

1.1 General

This manual contains very important information for assembly, start-up, use and maintenance of the meter. The manual must be read by all staff and any person in charge of the unit before starting work on the equipment. Store the manual safely in a place where mechanics, installers and other technical staff as well as operators can rapidly access it in case of emergency. Pay special warning and provide compliance with all safety notices in this manual!

1.2 Identification of safety instructions in this operating manual

This Operation & Maintenance Manual contains vital information which may endanger people and the unit if they are disregarded. These statements are identified by the following symbols:

WARNING!
Refers to a potentially hazardous situation. Failure to follow this instruction may lead to death or extremely serious injuries.

CAUTION!
Refers to a potentially hazardous situation. Failure to follow this instruction may lead to minor injuries or damage to property.

IMPORTANT! or NOTICE!
Failure to follow these safety instructions may endanger the machine and its functions.

IMPORTANT!
This indicates additional information that makes work easier and ensures trouble-free operation. Notes attached directly to the unit, e.g. cable references, directly must be observed and kept in a fully legible condition for future reference.

1.3 Operators qualification and training

Your assembly, operation, maintenance and inspection staff must be trained and have the appropriate qualification for use and operation of the unit. Area of responsibility, tasks and supervision of the personnel must be provided at all times by the customer. Unskilled operators must be duly trained and instructed. If necessary, this can also be undertaken by the manufacturer or certified supplier on behalf of the owner. Operators who are to work with the meter must read and understand the manual in all of its parts.

1.4 Electrical safety tips

Basic safety precautions should always be followed when installing and using this electrical equipment. These precautions include the following:

WARNING!
1.) Read and follow all instructions.
2.) To reduce the risk of injury, do not permit children to use this product unless they are closely supervised at all times.
3.) Risk of electric shock. Ensure that the device is secured with an earth-leakage circuit breaker (GFCI). Contact a qualified electrician if you cannot verify that the receptacle is protected by a GFCI.
4.) Do not bury the cable. Locate cord to minimize abuse from lawn mowers, hedge trimmers, and other equipment.
5.) To reduce the risk of electric shock, replace the cable immediately if damaged.
6.) To reduce the risk of electric shock, do not use an extension cable to connect the device to the power supply; use an appropriately located outlet socket.
7.) Keep this instruction at close for future reference.

ATTENTION!
The device is not suitable for installation in explosive areas.

1.5 Hazards due to failure to follow safety instructions

Failure to comply with the safety instructions may endanger not only people, but also the environment and the unit. Non compliance with the safety information will immediately cancel your rights of claiming for damages even during the warranty period.

The following hazards in particular may arise: - Failure of system functions. - Danger to people due to electrical, mechanical and chemical effects. - Danger to the environment due to leakage of hazardous substances.

1.6 Safety-conscious working

The safety instructions contained in this operating manual must be observed. The operating company is responsible for ensuring compliance with local safety regulations. Disturbances susceptible of impairing safety are to be eliminated immediately!

1.7 Safety instructions for the operator

Statutory regulations must be observed. A safe and ecologically beneficial disposal of process materials as well as replacement parts must be ensured. Danger due to electric current must be excluded (for further details, refer to the German VDE[1)] standards as well as local rules and regulations as well as chapter 1.4).

1) Association of German Electrotechnical Engineers

1.8 Safety instructions for installation, maintenance and inspection

The operator has to ensure that all assembly, maintenance and inspection works are done by authorized and qualified technical operators.

WARNING!
Assembly and maintenance of the equipment are to be strictly done after disconnecting the device from the power supply. It must be secured against reconnection during the works! Auxiliary assemblies and tools should be dismounted prior to maintaining. Cables are to be attached likewise only in this condition.

Neglecting of these instructions can lead to severe damages of device and loss of warranty.

All safety mechanisms and guards must be refitted and reactivated as soon as the work is complete.

NOTICE!
Apart from an incorrect installation also wrong controller settings (default settings, data of the parameter and configuration level, and internal changes of the instrument) can impair or damage the process normal functions.

There should always be a safety device that is independent of the controller. Configurations may only be carried out by technical personnel! If necessary use password protection! Always comply with the safety regulations and accident prevention laws of the country of use.

1.9 Self-made modifications and spares procurement

The device may be converted or changed only by qualified technical personnel.

If the device is incorrectly configured by assembly or service personnel, faults and hazards can arise during operation. In this case, the manufacturer declines any liability.

NOTICE!
Genuine spare parts and sensors authorized by the manufacturer ensure greater safety. Otherwise the guarantee expires.

NOTICE!
Local safety instructions and applicable regulations must be observed. The operating manuals of products used in the system must be observed, in particular the operating manual of the peristaltic pump which is included separately with the water sampling station.

2. Before start-up

2.1 Use for intended purpose

The EASYPOOL SMART 02 water sampling station is solely designed for sampling and control applications in the preparation of swimming and bathing water in swimming pools and whirlpools not operated in accordance with DIN 19643. The operational safety of the delivered unit can only be guaranteed when it is used in conformity with its intended use.

Use for any other purpose is not permitted and will invalidate any liability under the warranty.

2.2 Scope of delivery

Carefully check the delivery prior to installation to ensure the delivery is complete and to check for any transport damage. Contact the supplier and/or carrier regarding any questions concerning the delivery and/or transport damage.

Do not operate defective devices.

Items fixed to the EASYPOOL SMART 02 include:

- TOPAX DX SMART controller
- Temperature gauge (depending on model)
- 1-2 peristaltic pumps (depending on model)
- Chlorine measuring cell (depending on model)
- Wall holder

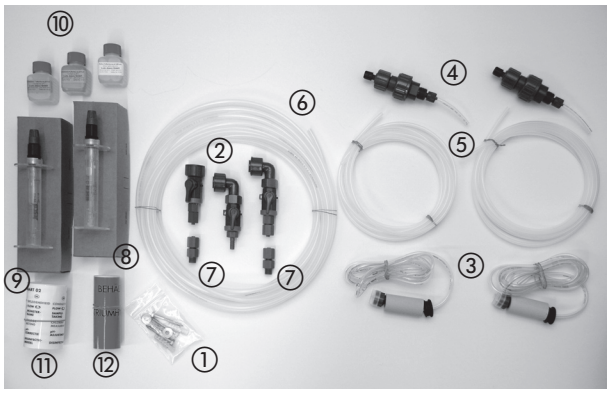

Fig. 2.1: Accessories supplied

Also included in the scope of delivery are:

① Mounting material
② 3 connections with ball valve
③ 1-2 suction lines (depending on model)
④ 1-2 Injection nozzles (depending on model)
⑤ 1-2 x 5 m pressure line hose (depending on model)
⑥ 10 m sample water line hose
⑦ 2 sample water connections with G 1/4 male thread
⑧ REDOX electrode (depending on model)
⑨ pH electrode
⑩ Buffer solutions for the pH- (6.8 and 9.27 pH) and REDOX electrodes (465 mV)
⑪ Set of decals for use on the water sampling station
⑫ "Chlorine bleach..." warning decal (depending on model)

2.3 Steps to start-up

After reading the operating manual, assembly and start up the equipment as detailed in chapter 5.

3. Water sampling station

The EASYPOOL SMART 02 water sampling station is a precise tool for maintaining auxiliary bathing water hygiene parameters.

The EASYPOOL SMART 02 is highly compact and easy to use. The base plate contains holes for guiding the water and housing the sensors. As a result there is no need for external piping and fittings and the water sampling station is highly compact.

The plate of the EASYPOOL SMART 02 water sampling station contains all the components needed for controlled, optimum disinfection of the bathing water.

These include:

- Several sensors for measuring the water values,
- Valves, taps and connections
- TOPAX DX SMART multi-channel controller (see chapter 4)
  - to analyse the readings,
  - to provide controlled supply of chemicals,
- Pumps to deliver the chemicals.

Fig. 3.0: EASYPOOL SMART 02 water sampling station with TOPAX DX SMART ①, peristalitic pumps(s) ②, Chlorine measuring cell ③ (depending on model), needle valve ④, temperature gauge ⑤ (depending on model) and pH electrode ⑥

The water sampling station is connected to the swimming pool water system. All the items required for inclusion in the system and for disinfection are either contained on the sampling station or provided as accessories.

3.1 Swimming pool water system

In a typical installation a circulation pump delivers the bathing water through a filter. When the disinfectant and the pH-adjusting solution (normally a pH reducing agent) have been added, the water returns to the pool via inlet nozzles. The water sampling system is incorporated in this system.

IMPORTANT!

A continuous flow of water is required to achieve successful sampling and control of the water quality. Any deviations in the flow velocity and frequent interruptions to the flow will have a negative effect on the control system and hence the water quality.

The following functional diagram illustrates the installation.

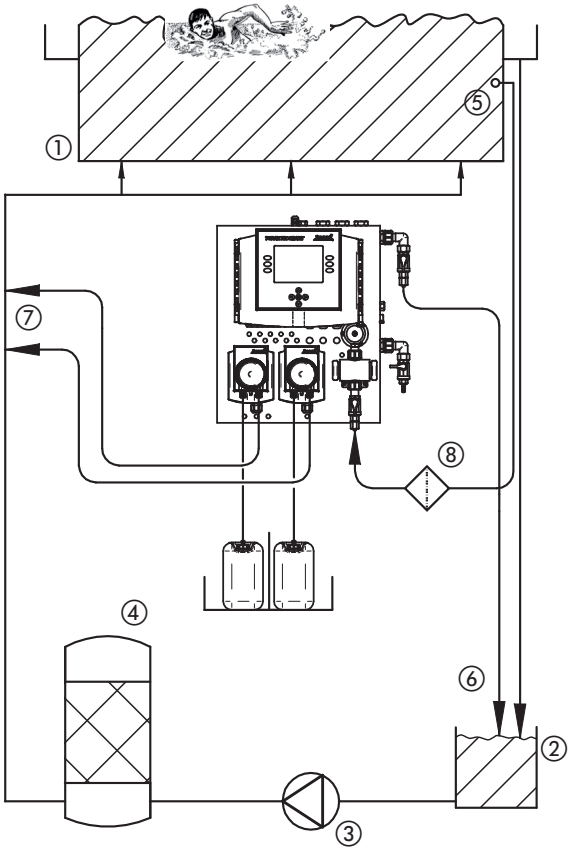

Fig. 3.1: Functional diagram of a swimming pool water system with an overflow channel

① Swimming pool
② Splash water tank
③ Circulation pump
④ Filter
⑤ Sample water removal
⑥ Sample water return
⑦ Injection nozzles for disinfectant and pH-adjusting solution
⑧ Sample water filter

3.2 Versions

The EASYPOOL SMART 02 water sampling station comes in different versions.

The following overview shows the options:

<table>
<tr><th rowspan="3">Item no.</th><th rowspan="3">Disinfectant</th><th rowspan="3">Control system</th><th colspan="7">Sampling system</th><th rowspan="3">RS 485</th></tr>
<tr><th colspan="2">Free chlorine</th><th colspan="2">REDOX</th><th rowspan="2">pH</th><th rowspan="2">Tem-pera-ture</th><th rowspan="2">Conductivity</th></tr>
<tr><th></th><th>Salt water</th><th></th><th>Salt water</th></tr>
<tr><td>42401002</td><td rowspan="6">Chlorine bleach</td><td rowspan="4">Chlorine, pH value</td><td rowspan="2">Yes</td><td rowspan="2">-</td><td colspan="2" rowspan="4">-</td><td rowspan="11">Yes</td><td>-</td><td rowspan="9">-</td><td>-</td></tr>
<tr><td>42401102</td><td>-</td><td>Yes</td></tr>
<tr><td>42401005</td><td rowspan="2">Yes</td><td>-</td></tr>
<tr><td>42401014</td><td>-</td><td>Yes</td><td>-</td></tr>
<tr><td>42401003</td><td rowspan="3">REDOX pH value</td><td colspan="2" rowspan="3">-</td><td rowspan="3">Yes</td><td rowspan="3">-</td><td>-</td><td>-</td></tr>
<tr><td>42401004</td><td>Yes</td><td>-</td></tr>
<tr><td>42401000</td><td>Active oxygen</td><td>-</td><td>-</td></tr>
<tr><td>42401010</td><td rowspan="3">Flow-through chlorine electrolysis, 0 … 20 mA</td><td>Chlorine, pH value</td><td rowspan="4">-</td><td rowspan="4">Yes</td><td colspan="2" rowspan="4">-</td><td rowspan="3">Yes</td><td>-</td><td>-</td></tr>
<tr><td>42401001</td><td rowspan="2">Chlorine, pH value, Conductivity</td><td rowspan="2">0 … 20 mS/cm</td><td>-</td></tr>
<tr><td>42401006</td><td>Yes</td></tr>
<tr><td>42401011</td><td>Flow-through chlorine electrolysis, ON/OFF</td><td>Chlorine, pH value</td><td>-</td><td>-</td><td>-</td></tr>
<tr><td>42401007</td><td rowspan="2">Flow-through chlorine electrolysis, 0 … 20 mA</td><td>REDOX, pH value</td><td colspan="2" rowspan="5">-</td><td rowspan="5">-</td><td rowspan="5">Yes</td><td>-</td><td>-</td><td>Yes</td></tr>
<tr><td>42401009</td><td>REDOX, pH value, Conductivity</td><td>-</td><td>0 … 20 mS/cm</td><td>-</td></tr>
<tr><td>42401008</td><td rowspan="3">Flow-through chlorine electrolysis, ON/OFF</td><td>REDOX, pH value</td><td>-</td><td>-</td><td>-</td></tr>
<tr><td>42401012</td><td>REDOX, pH value, Conductivity</td><td>-</td><td>0 … 20 mS/cm</td><td>-</td></tr>
<tr><td>42401016</td><td>REDOX, pH value</td><td>Yes</td><td>-</td><td>Yes</td></tr>
</table>

Table 3.2: EASYPOOL SMART 02 versions

3.3 Dimensioned drawing

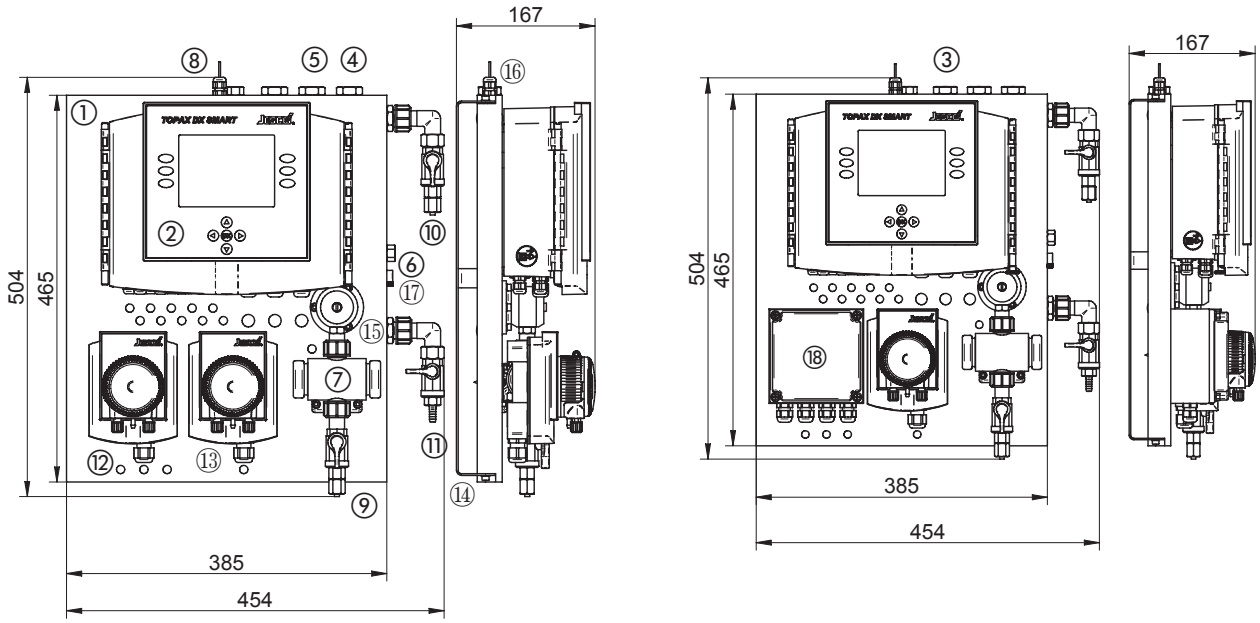

Figs. 3.3.1 and 3.3.2: EASYPOOL SMART 02 with 2 peristaltic pumps (left) and EASYPOOL SMART 02 with conductivity transmitter and one peristaltic pump (right)

3.4 Water sampling station components

① Water sampling station
② TOPAX DX SMART controller
③ Conductivity sensor (depending on model)
④ pH sensor
⑤ REDOX sensor (depending on model)
⑥ Temperature sensor (depending on model)
⑦ Free chlorine sensor (depending on model)
⑧ Flow monitors
⑨ Sampling water inlet with stop valve
⑩ Sampling water outlet with stop valve
⑪ Water sample tap connection
⑫ Disinfectant peristaltic pump
⑬ pH-adjustment solution peristaltic pump
⑭ Wall holder
⑮ Needle valve for flow control
⑯ Hinges
⑰ Anti-oscillation retaining screw
⑱ Conductivity transmitter

3.5 Water sampling station technical data

Water sampling station		
Free chlorine sensor	2-electrode measuring cell with automatic electrode cleaning Platinum/copper electrodes (platinum/silver for salt bathing water)	0 … 10 mg/l
REDOX potential sensor	Single rod measuring cell Platinum electrode (gold for salt bathing water)	0 … 1000 mV
pH value sensor	Single rod measuring cell Glass membrane electrode	2 … 12 pH
Temperature sensor	Resistance thermometer Pt100 electrode	0 … +80 °C
Conductivity sensor	Conductive measuring cell Stainless steel / PP electrode Output signal 4 … 20 mA	0 … 20 or 0 … 60 mS/cm
Operating pressure	0.2 . . . 3 bar	
Operating temperature	5...40 °C	
Water requirement	approx. 45 l/h	
Weight	approx. 11 kg	
Hydraulic connections	Clamped connection for 6/8 mm PE tubing	

Conductivity transmitter	
Power supply	230 V AC, 50 … 60 Hz
Output signal	4 … 20 mA
Working resistance load	max. 800 Ω
Protection class	IP 65
Ambient temperature	max. 55 °C
Housing	PP

Peristaltic pump	
Power supply	230 V AC, 50 Hz
See also attached peristaltic pump operating manual.	

4. Controller

The EASYPOOL SMART 02 water sampling station is equipped with the TOPAX DZ SMART multi-channel controller. This device uses the TOPAX DX technology designed for public swimming pools and has been specially configured for use in non-DIN 19643 operated swimming pools. It features a graphic colour display, an intuitive user interface with support for the installation and maintenance of the water sampling station.

4.1 Technical data

Power supply		90 … 264 V AC, 47 … 63 Hz	
Power consumption		approx. 24 W	
Housing dimensions		302 x 231 x 108 mm (W x H x D) wall mounted unit	
Display		Graphic colour display 5.7 inch, 320 x 240 pixels (RGB), with background lighting	
Keyboard		Keypad	
Measuring inputs (potential-free)		• Free chlorine • pH value • REDOX potential • Temperature • 4 … 20 mA for conductivity (passive)	
Regulating characteristic for 3 inputs (free chlorine, pH value, conductivity)		P, PI, PD or PID performance Disinfection output also with timer control system	
Control parameters		Xp: 1 … 500%, Tn: 1 … 200 minutes, Tv: 1 … 1200 seconds	
Measuring input	Free chlorine	Open amperometric measuring cell with mechanical cleaning (excess chlorine detector with 2 electrodes, CS120) Measuring range adjustable between 0 … 1, 0 … 2, 0 … 5 or 0 … 10 mg/l. Connected via series terminals*	
	pH value	0 … 14 pH, input resistance 10^9 Ω	connection via line-up terminals*
	REDOX potential	0 … 1000 mV, input resistance 10^9 Ω	
	Temperature	-10 … +150 °C	
	Conductivity	conductiv or inductive with separate measuring amplifier	20 mA type, measuring range depending on type of measuring amplifier
Digital inputs		• Early warning level input for disinfectant • Warning level input for disinfectant • Early warning level input for pH adjustment solution • Warning level input for pH adjustment solution • Filter cleaning: disconnection of the controller function without alarm • Insufficient sample water: disconnection of the controller function with alarm	
2-3 control outputs		Digital output (optocoupler)	48 V DC, 250 mA (pulse frequency 10 … 200 pulses/min)
		Relay output	• ON/OFF • Pulse frequency 10 … 100 pulses/min • Pulse length 10 … 120 seconds
		Continuous analog output	0/4 … 20 mA, max. working resistance 500 Ω
Alarm output		Relay output as common alarm for all readings	
		Measuring value alarm	min. and max. alarm freely adjustable, adjustable time delay: max. 200 min
		Safety shut off	To prevent overdosing (Y alarm), time delay adjustable: max. 200 min
Current outputs to remote transmission of measuring values • Free chlorine • pH value • REDOX potential • Temperature and conductivity		0/4 … 20 mA possible spreading; max. working resistance 500 Ω potential free	
		average spreading	>50 % with measuring input free chlorine and 0/4 ... 20 mA >10 % with measuring input pH value and REDOX potential
Computer interface (optional)		RS 485	
Support battery		VARTA CR 1/2 AA 2 V lithium (soldered in), useful life approx. 5 … 10 years	
Load capacity of the relay		230 V AC, 3 A	
Protection class		IP 65 with locked screw connections	
Ambient temperature		-5 … +45 °C	
Atmospheric moisture		95 % non-condensing	

*) max. 0.5 mm² with cable ends protection sleeve and max. 1.0 mm² without cable end sleeve.

4.2 Product design

The front housing ① and the rear housing ② of the controller are fitted together with two pivots (③ and ④) (see Fig. 4.2). The unit is designed so that the controller can be opened from either side.

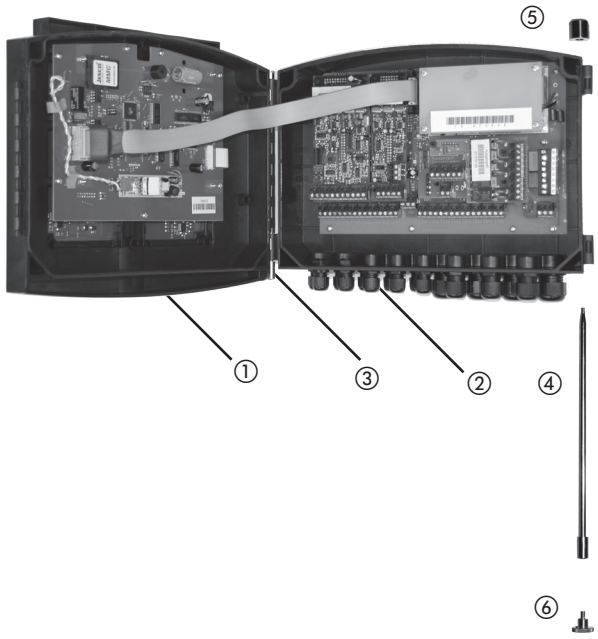

Fig. 4.2: Housing structure

① Front housing
② Rear housing
③ Hinge pivot (fitted)
④ Hinge pivot (disassembled)
⑤ Pivot head (screw-on)
⑥ Pivot disassembly tool

Opening the casing

To open the housing it is preferable to remove the right pivot. To do this, unscrew head ⑤ of the pivot.

NOTICE!
In order to open the housing remove only one hinge pivot from the equipment. If both bolts are removed at the same time, the upper part and the lower part of the box will fall loose.

NOTICE!
The equipment is to be opened only when plugged off the power supply.

reare housing

The rear housing contains the main board with slots for the functional assemblies. Depending upon the model, two input blocks are available together with an output block. For create a network connected to a PC, an interface assembly (RS 485) can also be installed. All blocks are connected by plug connectors to the main board and fastened with several nuts.

front housing

On the front housing there are the display plate and the keyboard. A colour display is available for displaying measurements and adjustments. The display board contains the memory card slot.

4.3 Terminal diagrams for the main board and technical assemblies

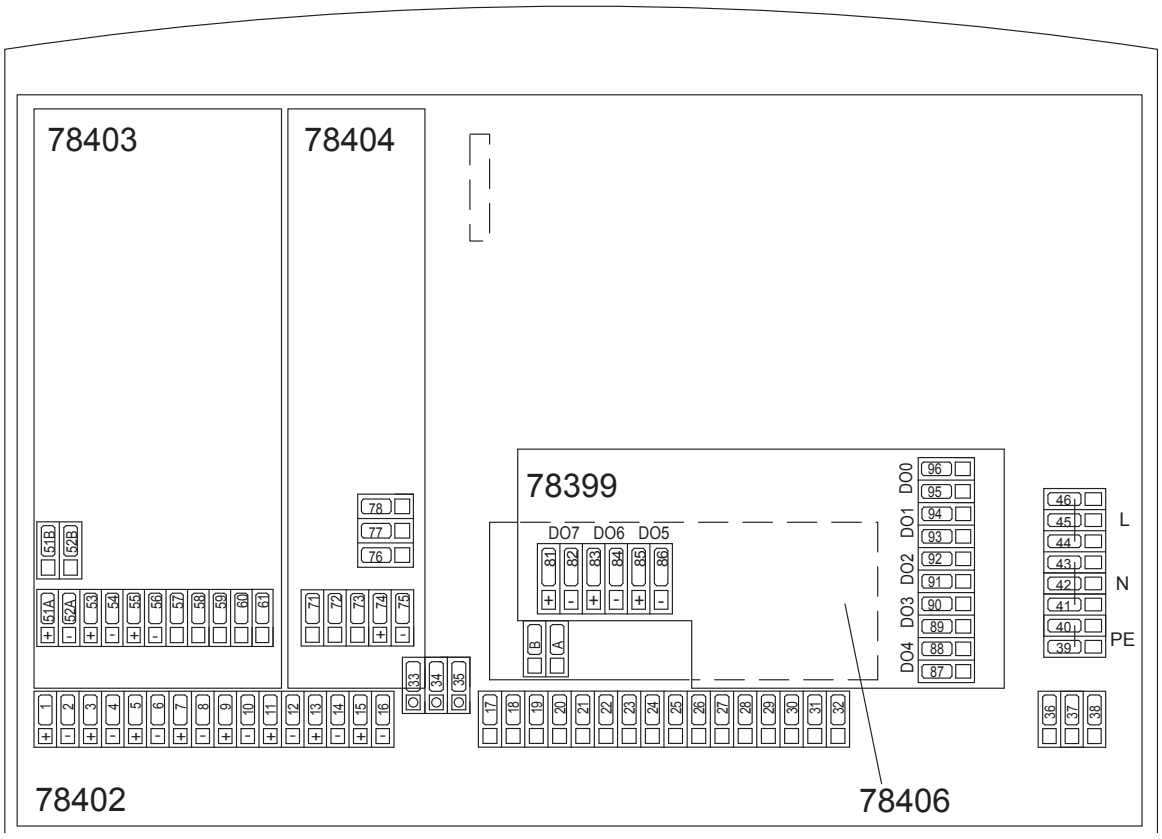

Fig. 4.14: Rear housing with the "78402" main board, input module "78403" (5x), input module "78404" (3x), output module "78399" and the partially hidden PC interface "78406".

Main board (order no. 78402)

Terminal		Function	
Analogue power outputs 0/4 … 20 mA (see also chapter 4.10)			
1	+	Measurement value output 0/4...20 mA	Disinfection
2	-		
3	+		pH value
4	-		
5	+		Temperature
6	-		
7	+		Salt content
8	-		
9	+		Programmed as controller output***
10	-		
11	+		
12	-		
13	+	Continuous controller output 0/4...20 mA	
14	-		
15	+		
16	-		
***) The routing of the configurable outputs is displayed according to the configuration and can be selected at any time in the Service >> HW-Status menu			

Terminal	Function	
Digital inputs		
17	Potential free input	Insufficient sample water *)
18		
19		Filter cleaning *)
20		
21		Level input pre-alarm Disinfectant **)
22		
23		Level input alarm Disinfectant **)
24		
25		Level input pre-alarm pH adjusting solution **)
26		
27		Level input alarm pH adjusting solution **)
28		
29		not used
30		
31		
32		
*) normally ON or normally OFF **) normally ON or normally OFF or not active		

Terminal		Function	
33	A	Internal PC interface	Interface for software-update
34	B		
35			
36		Alarm relay as common alarm	Normally Closed (N.C.)
37			Middle contact
38			Normally Open (N.O.)
39	PE	Protection conductor	90 … 264 V AC
40			
41	N	Neutral conductor	
42			
43			
44	L	Phase	
45			
46			

5-fold Input block (part no. 78403):

Terminal		Function	Cable colour
51A	+	Free chlorine Chlorine measuring cell CS120 Electrode mating copper/platinum or silver/platinum	CS120 (Cu/Pt) Cu : blue (-) Pt : red (+) CS120 (Ag/Pt) Ag : purple(-) Pt : red (+)
52A	-		
51B	+	not used	
52B	-		
53	+	pH value	
54	-		
55	+	REDOX	
56	-		
57		Temperature (Polarity at wish)	
58			
59		not used	
60			
61			

Input module (3x) (part no. 78404) optional:

Terminal		Function
71		not used
72		
73		
74	+	20 mA passively (without supply to the sensor) Conductivity measurement
75	-	
76		not used
77		
78		

outputs board (order no. 78399)

Terminal		Output		
81	+	Digital output (optocoupler)	DO7	programmable ***)
82	-			
83	+		DO6	
84	-			
85	+		DO5	
86	-			
87		Relay output	DO4	
88				
89			DO3	
90				
91			DO2	
92				
93			DO1	
94				
95			DO0	
96				

***) The routing of the configurable outputs is displayed according to the configuration and can be selected at any time in the Service >> HW-Status menu

IMPORTANT!
To prevent the output relays from bonding in the case of a short in the load circuit, it must be separatly protected with the maximum relay switching current. For inductive loads, apply a protective circuit to the contacts of the relays (spark suppression). The manufacturer recommends the use of the interference suppression module / spark suppression device (part no. 78614).

4.3.1 Terminal connection 1: control of two peristaltic pumps (disinfection and pH), free chlorine and pH measurement

	Description	Term.	Cable	Remarks
①	Chlorine measuring cell CS120	51 A +	red (RD)	platinum (Pt)
		52 A -	Blue (BU)	Copper (Cu)
			purple (VT)	Silver (Ag)
②	pH single-rod measuring cell	53 +	white (WH)	Internal lead
		54 -	black (BK)	Screen
④	Temperature sensor Pt 100	57/58		
⑤	Insufficient sample water contact	17/18		

	Description	Term.	Cable	Remarks
⑥	Disinfection peristaltic pump	88	Brown (BN)	Relay
		41	Blue (BU)	N
		39	Yellow/green (YE/GN)	PE
⑦	Peristaltic pump pH	90	Brown (BN)	Relay
		41	Blue (BU)	N
		39	Yellow/green (YE/GN)	PE
⑧	pH relay suppression module	90/43	black (BK)	Relay / N
⑨	Disinfection relay suppression module	88/43	black (BK)	Relay / N

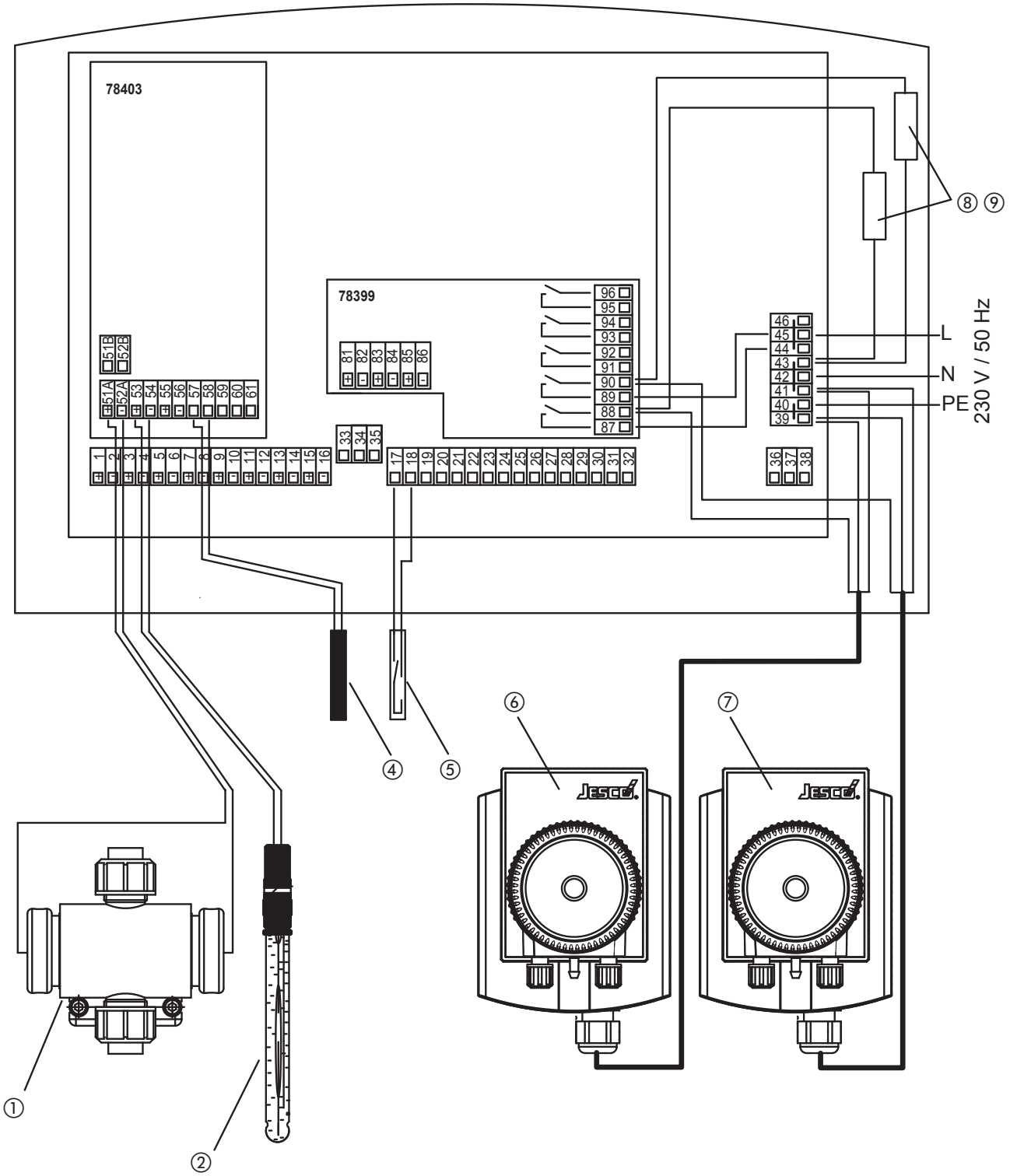

4.3.2 Terminal connection 2: control of two peristaltic pumps (disinfection and pH), REDOX and pH measurement

	Description	Term.	Cable	Remarks
②	pH single-rod measuring cell	53 +	white (WH)	Internal lead
		54 -	black (BK)	Screen
③	REDOX single-rod measuring cell	55 +	white (WH)	Internal lead
		56 -	black (BK)	Screen
④	Temperature sensor Pt 100	57/58		
⑤	Insufficient sample water contact	17/18		

	Description	Term.	Cable	Remarks
⑥	Disinfection peristaltic pump	88	Brown (BN)	Relay
		41	Blue (BU)	N
		39	Yellow/green (YE/GN)	PE
⑦	Peristaltic pump pH	90	Brown (BN)	Relay
		41	Blue (BU)	N
		39	Yellow/green (YE/GN)	PE
⑧	pH relay suppression module	90/43	black (BK)	Relay / N
⑨	Disinfection relay suppression module	88/43	black (BK)	Relay / N

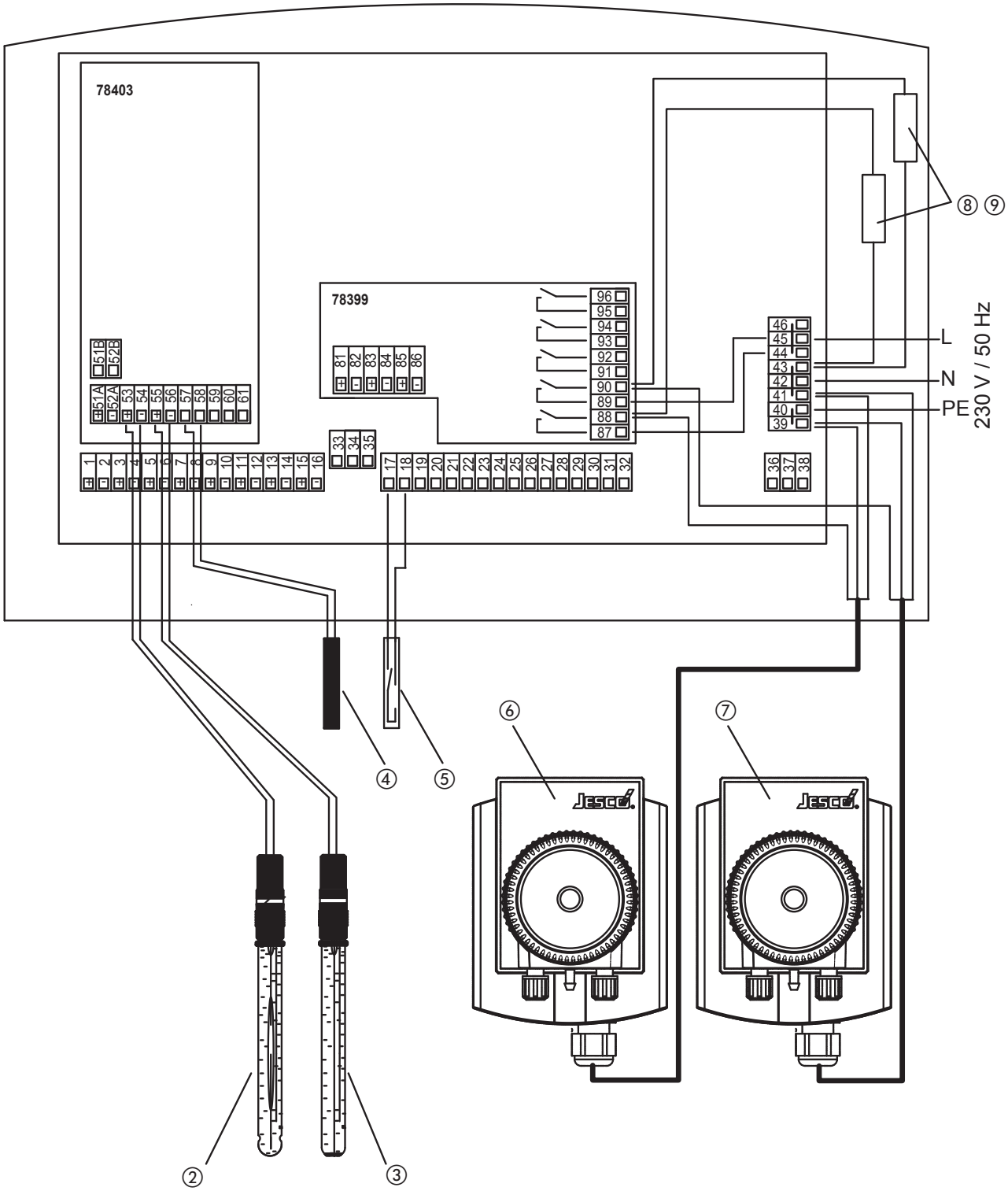

4.3.3 T.C. 3: control of flow-through chlorine electrolysis and peristaltic pump (pH), free chlorine and pH measurement

	Description	Term.	Cable	Remarks
①	Chlorine measuring cell CS120	51 A +	red (RD)	platinum (Pt)
		52 A -	Blue (BU)	Copper (Cu)
			purple (VT)	Silver (Ag)
②	pH single-rod measuring cell	53 +	white (WH)	Internal lead
		54 -	black (BK)	Screen
④	Temperature sensor Pt 100	57/58		
⑤	Insufficient sample water contact	17/18		

	Description	Term.	Cable	Remarks
⑩	Technoline SC 11 / 14 Flow-through chlorine electrolyses ❶: power supply unit ❷: control unit ❸: cable (A/N 91190000) ❹: electrolytic cell	87/88	yellow (YE)	Relay
⑦	Peristaltic pump pH	90	Brown (BN)	Relay
		41	Blue (BU)	N
		39	Yellow/green (YE/GN)	PE
⑨	pH relay suppression module	88/43	black (BK)	Relay / N

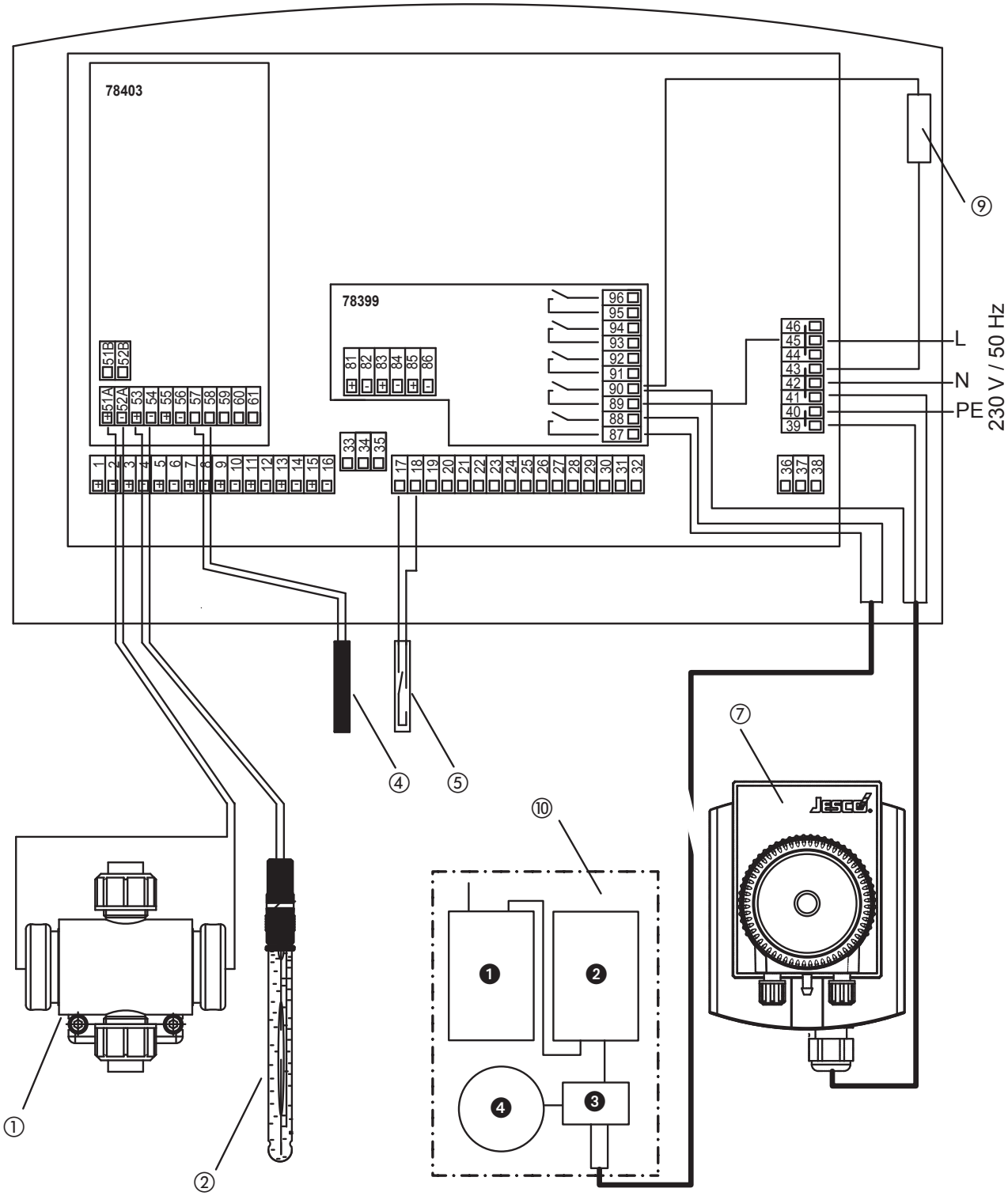

4.3.4 T.C. 4: control of flow-through chlorine electrolysis and peristaltic pump (pH), REDOX and pH measurement

	Description	Term.	Cable	Remarks
②	pH single-rod measuring cell	53 +	white (WH)	Internal lead
		54 -	black (BK)	Screen
③	REDOX single-rod measuring cell	55 +	white (WH)	Internal lead
		56 -	black (BK)	Screen
④	Temperature sensor Pt 100	57/58		
⑤	Insufficient sample water contact	17/18		

	Description	Term.	Cable	Remarks
⑩	Technoline SC 11 / 14 Flow-through chlorine electrolyses ❶: power supply unit ❷: control unit ❸: cable (A/N 91190000) ❹: electrolytic cell	87/88	yellow (YE)	Relay
⑦	Peristaltic pump pH	90	Brown (BN)	Relay
		41	Blue (BU)	N
		39	Yellow/green (YE/GN)	PE
⑨	pH relay suppression module	88/43	black (BK)	Relay / N

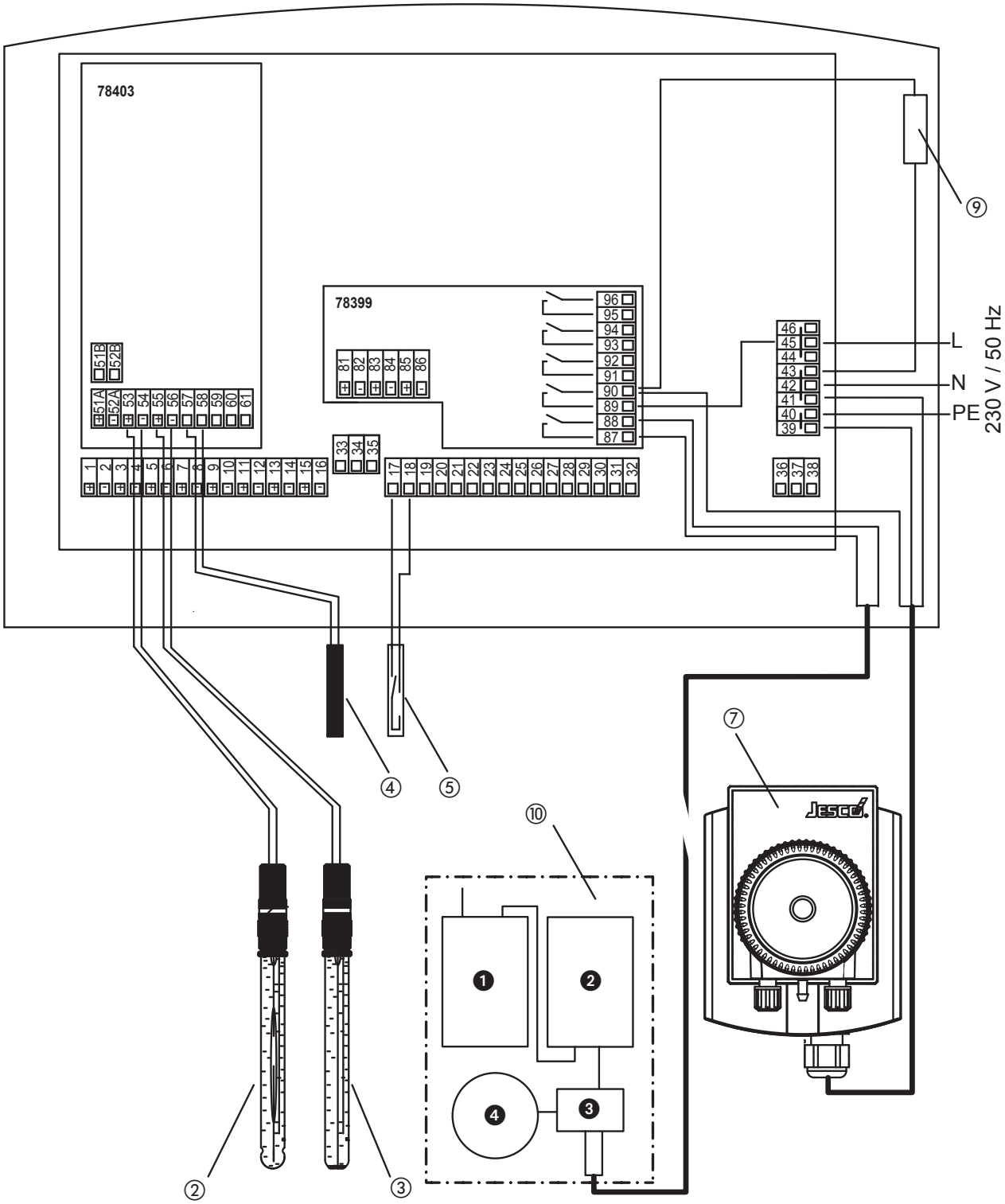

4.3.5 Terminal connection 5: Conductivity measurement (option)

	Description	Terminal	Remarks
⑪	4 … 20 mA input Conductivity measurement	74 +	
		75 -	
⑫	Relay output Conductivity control (e.g. brine dosing)	90	Relay
		42	N

	Description	Terminal	Remarks
⑬	Power supply Conductivity transmitter	45	L
		41	N
		39	PE
⑬	Conductivity measuring cell		

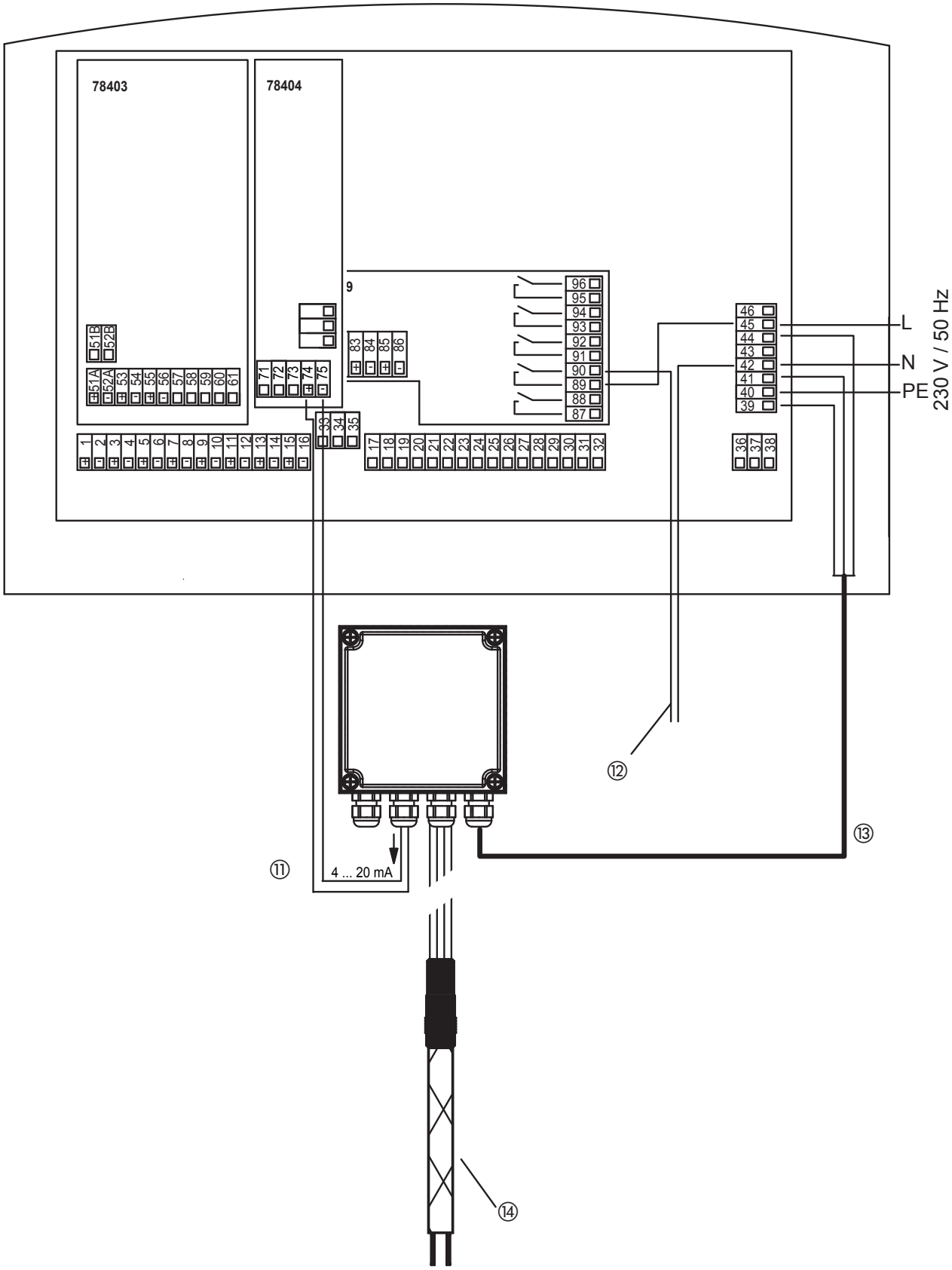

4.4 Operation and menu structure

4.4.1 Operation

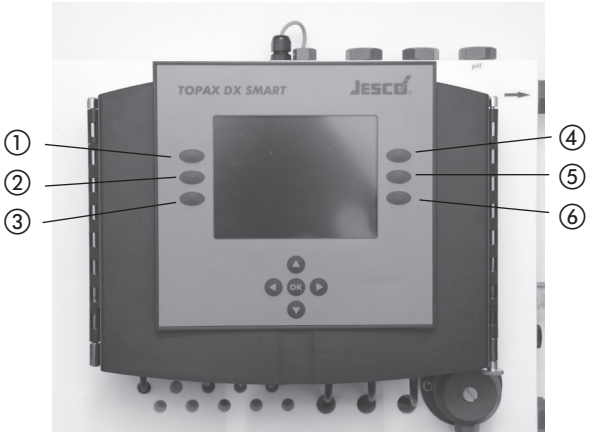

Fig. 4.15: View of TOPAX DX SMART housing with with operating panel.

Keys	Functions
Crossed arrow keys	• Menu change-over in the menu "service"; • Change-over between the individual numbers • Numerical values change, parameter adjust Press the key to change from one menu item to the other. Numeric values are entered and modified continuously.
Key "OK" between the arrow keys	Input information are received and saved. Successful saving is notified by a longer beep
Key ①: „ESC“	Exit the menu, one level up Terminate input without storage
Key ①: „ESC“ (hold 5 seconds)	Return to the main menu
Keys ② - ⑥	The functions of the keys vary according to the menu and are displayed respectively.

TOPAX DX SMART key layout

If no key is operated, the controller returns automatically to the measuring mode after approx. 5 minutes. Changed parameters, which were not confirmed with the “OK” key, are not stored.

Exception: During the calibration and with the configuration no “time out” takes place.

NOTICE!
If no values are to be changed, "ESC" can be pressed and the selected menus left at any time. The controller continues working with the old settings. Changed values are confirmed with the “OK” button. The "clock" and "timer" functions are exceptions. Their modification does not require any confirmation.

General rules for entries:

- The values can only be changed within the admissible value range.
- The function of the key is signalled with a tone.
- Some functions can be password-protected against unauthorised access (see chapter 4.12, menu 5.9 "Password").

NOTICE!
An auxiliary function is available for many menu items. In this case, the "Help" key is shown.

4.4.2 Menu structure

The menus are as a result shown on the display with its coloured presentation and high resolution in clear text and clearly arranged. As a result only the structure is described, not every detail. (for details of the service menu see chapter 4.12)

Standard display

If there is no entry made within 5 minutes, the device changes to the standard display (see Fig. 4.4.2.1).

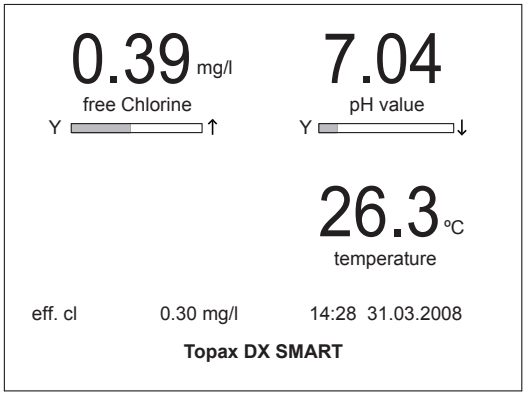

Fig. 4.4.2.1: Standard display

The bars below the digits of the measurements indicate the strength of the respective output signal. The display colour changes, depending on the signal power, from green (0 ... 85%) to orange (85 ... 95%) and red (95 ... 100%). Blue stands for manual operation or basic load dosing.

By pressing a random key you go to the main menu (menu 1).

IMPORTANT!
All menus are given a number in the bottom left corner (see menu 1). See tab. 4.4.2.2.

Menu 1 and 2: Main menu and sub-main menu

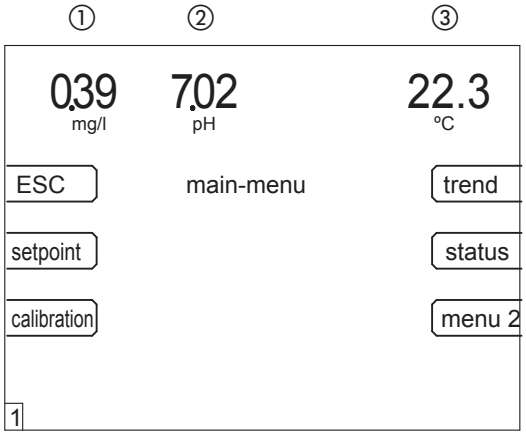

Menu 1: The main menu and starting point for reaching all further sub-menus and their functions: With the displays for ① free chlorine, ② pH value and ③ temperature (°C).

Menu 2 serves as a sub-main menu (see menu 2)

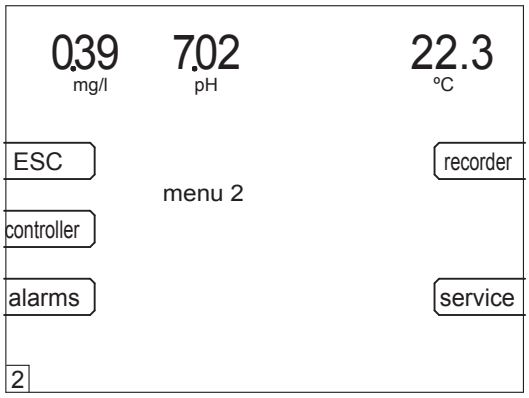

Menu 2: Extension of the main menu

You can access all other sub-menus through the main menu (menu1) and the sub-main menu (menu 2).

Menu	Key	Comment on sub-menu
1	**Main menu**	
	ESC	Return to the standard display
1.1	Target values	Set the default values of the configured controller
1.2	Calibrate	Calibrate all sensors connected to the system
1.3	Trend	Show measurements as line diagram and zoom at wish
1.4.1	Status	Displays all important parameters for information
2	Menu 2	Change to other menus
2	**Menu 2**	
	ESC	Return to the main menu
2.1	Controller	Sets the characteristics of all configured controllers (this menu can be password-protected).
2.2	Alarms	Assigning the alarms to the related measurement signals
2.3	Recorder	Sets the zooming function for the analog outputs 0/4 … 20 mA
5	Service	Further adjustment options (this menu can be password-protected)

Table 4.4.2.2: Overview of the TOPAX DX SMART sub-menus.

4.5 Measurement value inputs

This chapter exemplifies the chemical and physical correlation, which is necessary to understand the behaviour of the input measuring values.

The input measuring values are examined for:

- Free chlorine
- pH value
- REDOX potential
- Temperature
- Conductivity

In doing so an important element is the calibration of the sensors.

NOTICE!
When set up the unit for the first time, care should be taken to perform individual calibration of each output immediately after connecting the sensors in the system. The controller monitors all calibration processes based on reasonable parameters (zero point and transconductance). The measured data is recorded. Non calibrated and „Roughly calibrated" value inputs are marked out in clear text. „Roughly calibrated" values are shown on the main display in red.

NOTICE!
Please note that time delays are possible due to the initial running times of the sensors.

The limits of „Roughly calibrated" are:

measurement value	limits
Transconductance pH value	< 53 or > 61 mV/pH
zero point pH	< -40 or > 40 mV
REDOX transconductance	< 0.85 or > 1.2 mV / mV
Chlorine transconductance for amperom. measuring cell	< 3 or > 100 µA / mg/l

The remark „roughly calibrated" sheds light on the calibration quality and the conditions of the electrochemical electrodes. If necessary you can look for calibration faults and replace the sensors at the appropriate time. You can use the sensors unchanged until replacement. The controller will continue to work normally.

NOTICE!
Correct calibration is a pre-requisite for the safe operation of the water sampling station. The calibration must be checked at regular intervals.

4.5.1 Free chlorine measurements input

The free chlorine reading depends on the pH value of the water sample. This is based on the reaction of the chloride ions at different pH values. This relationship determines the chlorine dissociation curve (see Fig. 4.5.1).

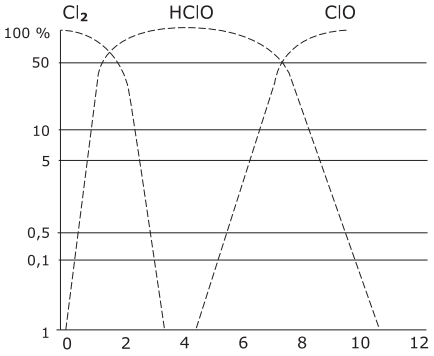

Fig. 4.5.1: Chlorine dissociation curve as a function of the pH value

For photometric measurements the pH value of the sample is buffered to approx. pH 6.5. As a result the measurement has a higher effective chlorine content than is actually in the bathing water. In the presence of high pH-values significant differences will occur between expected and actual disinfection if assessed by photometric analysis. The main display will show therefore 2 free chlorine values: the photometry value and the the effective chlorine content ("eff. chlor") to kill germs at the current pH value.

NOTICE!
For saline bathing water use a platinum/silver chlorine measurement cell instead of platinum/copper.

Calibration

Before starting the calibration, the upper value of the measuring range of the sensor must be specified (Main menu >> Menu 2 >>Service >> Inputs). In non-DIN 19643 operated swimming pools it is preferable to use the 0 … 2 mg/l measuring range.

The input can then be calibrated using a two-point calibration (Main menu >> Calibrate >> Free Chlorine >> 2 point):

The physical value (µA) measured at the sensor is shown on the display during calibration.

Calibration method 1: Zero-point calibration

The sample water flow is therefore stopped. (ball valve on water sampling station inlet). The value of the physical quantity shown on the display (approx 5 … 10 µA) can be saved with "OK" as soon as it stops changing. The device automatically changes to the next menu section.

Calibration method 2: DPD

The sensor is operated with sample water. If the physical value on the display does not change any more, the chlorine content in the sample water is determined via a photometer (DTP method). To avoid signal deviations during DTP determination as reading errors, the sample water must be taken from the measuring cell and the current signal at the time of removal of the sample water must be saved. The content of chlorine in water is measured by means of the DPD method. The value must be set in the controller and saved by pressing OK.

After storage the transconductance value of the chlorine sensor is shown. The typical transconductance reading is 25 µA … 35 µA (depending on water sample) per mg/l of free chlorine. The accuracy of resistivity measurements is monitored throughout the process.

1-point calibration is often sufficient (reference value 2 only) to check the chlorine content after optimization.

4.5.2 Measuring input pH value

The voltage signal transmitted by the combination electrode is proportional to the pH value. This voltage is defined by the Nernst voltage. The Nernst voltage ist he change in voltage per pH unit. It depends on the temperature of the medium to be measured (see corresponding technical literature or German Standard DIN 19261).

The Nernst voltage is measured between the pH glass electrode and a reference electrode. Mechanically these two electrodes are integrated in a pH combination electrode.

Calibration

Calibration of the electrode may be performed by ways of "2-point calibration" with 2 buffer solutions or by "1-point calibration" with final input of the resistivity value. "Single point calibration" requires the transconductance of the single-rod measuring cell to be measured in a laboratory beforehand.

The actual voltage of the single-rod measuring cell and the theoretical value (ideal value) of the buffer solution setting are displayed during calibration. This allows the rating of the single-rod measuring cell to be determined during calibration, assuming fresh buffer solutions.

The reaction time for any brand new electrode is just a few seconds and the electrode is considered as fully adjusted when the physical reading becomes stable. In the case of older combination electrodes the reaction time may be longer.

2-point calibration

Main menu >> Calibrate >> pH value >> 2 point

Buffer 1: Zero-point calibration

Submerge the pH combination electrode in a buffer solution which is equivalent or close to the zero point of the electrode. The ideal zero point (0 mV) of the combination electrode is pH 7.00, the actual zero point, however, deviates slightly from this value. For zero-point calibration a buffer solution of pH 6.80 is available from the manufacturer. When immersing the pH single-rod measuring cell in this solution, a voltage of 12 mV can be displayed theoretically. The physical value actually measured is, however, always different from the theroretical one.

When the physical value on the display becomes stable, you may save the calibrated value by pressing „OK“.

IMPORTANT!
Should the actual measured voltage strongly differ from the design zero-point of the electrode, it means there is a zero-point drift of the electrode. Zero-point drift should not exceed the specifications of the DIN Standards 19265. In the event of zero-point drift exceeding ± 40 mV, TOPAX DX gives a poor probe calibration warning.

Buffer 2: Transconductance calibration

Accurately clean the electrode with deionised or distilled water before calibration of the resistivity.

NOTICE!
Avoid rubbing off glass electrodes as this will produce a static charge on the electrode. This would result in faulty readings.

For slope calibration a buffer solution must be used which differs at least 2 pH units from the zero point. For zero-point calibration a buffer solution of pH 9.27 is available from the manufacturer. If you are using a different buffer solution for transconductance calibration, the value for this buffer solution must be set on the controller. When immersing the single-rod measuring cell in the buffer solution (Ph = 9.27), a theoretical voltage of -134 mV should be displayed. The physical value actually measured is, however, always different from the theroretical one. Confirm presetting by pressing the “OK“ key.

Then the slope value of the combination electrode is displayed. In accordance with the DIN Standards 19265 the resistivity if an electrode should range between 52 and 59 mV per pH-value.

The zero-point stability and reasonableness of the transconductance are monitored.

IMPORTANT!
If the transconductance reading differs considerably from these values, check the single-rod measuring cell or the connecting cable and the plug connectors. Should zero-point and resistivity values of the combination electrode exceed the admissible tolerances, the system notifies the operator with a warning message. In this case provide for immediate replacement of the electrode.

IMPORTANT!
Store buffer solutions in a cool and dark place! Consider its durability. Make sure that the buffer solution is not contaminated. That is why you should not put single-rod measuring cells directly from one buffer solution into another solution.

1-point calibration

Main menu >> Calibrate >> pH value >> 1 point

Single-point calibration may also be used for pH calibration with a single-rod measuring cell (see section 6, menu 1.2).

Submerge the pH combination electrode in a buffer solution which is equivalent or close to the zero point of the electrode. The ideal zero point (O mV) of the combination electrode is pH 7.00, the actual zero point, however, deviates slightly from this value. The manufacturer provides a buffer solution with pH value of 6.80 for zero-point calibration. When immersing the pH single-rod measuring cell in this solution, a voltage of 12 mV can be displayed theoretically. The physical value actually measured is, however, always different from the theroretical one.

When the physical value on the display becomes stable, you may save the calibrated value by pressing „OK“.

Now enter the resistivity of the electrode.

IMPORTANT!
Should the actual measured voltage strongly differ from the design zero-point of the electrode, it means there is a zero-point drift of the electrode. Zero-point drift should not exceed the specifications of the DIN Standards 19265 (±40 mV).

Offset compensation

In accordance with DIN 19643, the control of the pH value is to be made with an electrical metric pH value measurement.

By external influences it can be possible that the pH value of the electrical metric measurement, measured by hand with the photometer, deviates by a constant value. The "Offset compensation" menu allows you to compensate for this difference (setting range +/- 0.30 pH).

NOTICE!
The offset value is set to „0“ after every new calibration.

4.5.3 REDOX potential measurement input

The REDOX potential is measured using the REDOX single-rod measuring cell. It measures the voltage which exists in the water due to oxidizing and reducing ions.

NOTICE!
For saline bathing water use a RESOX single-rod measuring cell with a gold electrode instead of a platinum electrode.

Calibration

Main menu >> Calibrate >> REDOX

Calibrate the combination electrode during startup. To calibrate the REDOX single-rod measuring cell only one reference value must be set. The physical value (mV) measured at the sensor is shown on the display during calibration.

To calibrate you need a buffer solution in order to measure a defined voltage in conjunction with the REDOX single-rod measuring cell (default value: 468 mV). This value can be changed when using other buffer solutions and/or combination electrodes with other electrolytes. To change, use the buttons on the control panel. The voltage actually measured is shown on the display during calibration. This value has a small deviation from the given value of the buffer solution. The deviation should not be bigger than approx. 10%.

The accuracy of resistivity measurements is monitored throughout the process.

After a reaction time (approx. 1 minute) the physical value does not change anymore.

The reference value can be now entered and saved by pressing the “OK” button.

IMPORTANT!
With old combination electrodes the response time can become larger and vary. Furthermore the measured value can be largely different from that of the buffer solution. This signifies that the combination electrode must be checked and possibly replaced.

IMPORTANT!
The measuring signal of the REDOX single-rod measuring cell can be also configured to control the disinfection.

4.5.4 Measuring input temperature

Always use a two-wire "Pt 100" sensor.

Calibration

Main menu >> Calibrate >> Temperature

The measuring input is factory-calibrated. If can be re-calibrated if necessary.

To do this, measure the temperature of the sample water with a reference thermometer and set the reading as a reference in the controller.

4.5.5 Conductivity reading input

Record the increasing trend after brine or sea water baths following the quality of the brine. If for example a Technopool flow-through chlorine electrolysis cell is used to generate the free chlorine, brine water must be on hand.

The conductivity of the sample water can be measured and the saline concentration kept constant. The measuring signal of the conductivity measuring cell is converted into a standard 4 … 20 mA current signal in the conductivity transmitter.

Calibration

Main menu >> Calibrate >> Conductivity

Setting of the zero point is not necessary. Only the reference value needs to be checked *). Afterwards the slope is indicated in the measuring cell. The accuracy of resistivity measurements is monitored throughout the process.

Computationally the measured value is indicated as %-salt content and in mS/cm. Example: 4 … 20 mA corresponding 0 … 20 mS/cm.

current (mA)	salt content (mS/cm)	salt content (%)
4.00	0	0.00
8.00	5.0	0.25
12.00	10.0	0.50
16.00	15.0	0.75
20.00	20.0	1.00

*) As the conductivity transmitter is factory-calibrated, the setting can be calculated from the following table. (The current measured [mA] is shown in the calibration window). A hand-held measuring device can be used for the reference measurement.

4.6 Explanation of digital inputs

The controller has some digital inputs to monitor operating conditions. These have different effects:

<table>
<tr><th></th><th>Insufficient sample water</th><th>Filter cleaning</th><th>Level warning Chemical</th><th>Level alarm Chemical</th></tr>
<tr><td>Sensor connected</td><td>Water sample station flow monitor</td><td>Site filter control system contact</td><td colspan="2">Float switch in chemical canister (option)</td></tr>
<tr><td>Fault display</td><td colspan="4">Yes</td></tr>
<tr><td>Alarm via alarm relay</td><td>Yes</td><td>No</td><td colspan="2">Yes</td></tr>
<tr><td>Control function for fault condition</td><td colspan="2">Outputs 0%</td><td rowspan="2">No effect</td><td rowspan="2">Outputs 0%</td></tr>
<tr><td>Control function during start-up lag time</td><td>Outputs 0%</td><td>Outputs fixed to most recent value before start of filter cleaning</td></tr>
<tr><td>Delivered state</td><td>Input active</td><td colspan="3">Input not active</td></tr>
</table>

The switch direction, Normally Open (N.O.) or Normally Closed (N.C), can be activated and set in the menu Service >> Switch Inputs.

The start-up delay is set in the menu Service >> Start-up.

After filter cleaning there is normally a long period of time before the water sampling station can be refilled with representative water from the swimming pool. The controller therefore works during the start-up delay with the control output that was active immediately before filter cleaning.

NOTICE!
The start-up delay is also active after the power supply has been switched on and after calibration.

NOTICE!
The filter pumps of privately operated swimming pools are often switched on for just a few hours a day. To ensure the controller can work reliably despite the run-in time of the sensors, the run-in term should be set as follows.

Disinfection sensor	Recommended start-up delay
Chlorine measuring cell CS120	1200 s
REDOX electrode	600 s

4.7 Control outputs

4.7.1 Output types

The following output types are available for configuration in the controller:

- Pulse frequency (electronic / optocoupler)
- Pulse frequency (Relay)
- Pulse length (Relay)
- Constant analog output 0/4 … 20 mA
- ON/OFF (Relay)

Further settings can be made on each of these output types in the Service >> Outputs menu.

ON/OFF (Relay)

Relay output - if the adjusted value are excessive the relay switches, a hysteresis is adjustable.

Pulse length

10 .. 120 seconds cycle time, relay output (e.g. for solenoid valves).

Depending on the control deviation and the defined control parameters, the relay pulls in or drops out for the set cycle duration. If the cycle duration is 30 seconds and the controller output power is 40 % the relay pulls in for 12 seconds and it does not for 18 seconds.

Pulse frequency

10 ... 200 pulses per minute as a adjustable maximum

The pulse frequency depends on the deviation and the set controller parameters, i.e.: at a controller output of e.g. Y=25% and a pulse frequency of 100 pulses/minute, the controller sends 25 pulses/minute.

Observe the maximum stroke frequency of the connected dosing pump.

Digital output (optocoupler output)

Pulse frequency output for controlling solenoid-driven dosing pumps or motor-driven pumps with intelligent electronic control unit (e.g. MAGDOS or MEMDOS dosing pumps). Ensure the right polarity.

Relay output

Pulse frequency output, pulse length output or "ON/OFF" to control motor-driven dosing pumps, peristaltic pumps or solenoid valves.

Continuous analog output

A continuous analog output, current output can be set on controllers to control continuous actuators.

The current varies between 0 and 20 mA depending on the control deviation (max. working resistance 500 Ω).

It can be selected between:

- 0 … 20 mA
- 4 … 20 mA
- 20 … 0 mA
- 20 … 4 mA

4.7.2 Output limit switch

The output of each automatic controller can be limited in its upper value. To do this, enter the maximum percentage value the actuator should reach.

Example: a value of 80% operates the automatic controller to a maximum of 80 %. The algorithm of the automatic control is however computed further on 100%. It is to be noted that the automatic controller parameters are selected accordingly.

The smallest adjustable value for the maximum limit is 50 %.

This limit is useful for example if for example an oversized dosing pump has been installed. This will ensure precise control. The setting is made in the Service menu.

4.8 Controllers

Definitions

Term	Definition
actual value (X)	The actual value of X of the measured value for the respective sensor is constantly indicated.
Setpoint (W)	Set point W of a control system defines the value at which the controller has to settle the process and keep it constant.
Control deviation (X-W)	Control deviation X-W occurs if the actual value X of the measurand differs from set point W. Control variable Y results from the control deviation and the control parameters set.
Control variable Y	Control variable Y of a control system defines the value which the controller transmits to the final control element depending on the parameters set and control deviation X-W (between 0 % and 100 %).

4.8.1 Proportional controller (P controller)

Proportional range Xp

(proportional effect or amplification of the controller)

The proportional range Xp (p-range) of a proportional controller indicates by which value the measured variable X must deviate from the default value W, so that the correcting variable is Y = 100%. If the control deviation is less, the control variable is reduced as well in terms of percentage.

Control variable Y of a P-controller is influenced only by the control deviation (X-W)in terms of percentage.

The P-range is indicated as a "%" and always refers to the measuring range final value.

The proportional range is thus an indirect measure of the controller amplification K_R:

$$K_R = 100\% / Xp\ \%$$

With a Xp range of 50 % the controller amplification is :

100 /50 = 2 -> controller amplification $K_R = 2$

Xp = 50 % means that the control variable Y changes around 100 % when the actual value deviates by 50 % from the default value (related to the measuring range final value).

4.8.2 Proportional integral (differential) controller, PI(D) controller

Reset time Tn

(integral effect of PI controller)

The integral time of a PI- or PID-automatic controller is called reset time Tn. The integral time is the time required by the manipulated variable Y in the case of a constant deviation between default and actual values in order to reach the same change of the output signal, which is immediately produced by the p-rate after the jump of the deviation between default and actual values.

Example of proportional range and reset time

Xp = 50 % (amplification = 2)

Tn = 3 min

(sudden change of the actual value by 15%)

After a sudden deviation of the actual value from the default value by around 15 % (X-to-W), the correcting variable Y changes by the same rate as the controller amplification, that is twice the Xp value or by 30%.

Because of the integral pattern, the control variable continues to increase provided the (X-W) deviation remains, and after a time Tn = 3 minutes reaches again 30% of the control variable.

Control variable	Set value
Measuring range for free chlorine	1.00 mg/l
X (actual value)	0.15 mg/l
Set point (W)	0.30 mg/l
X - W	15 %
Xp (P-range)	50 %
Tn	3 minutes
Y (Immediate power output of the automatic controller)	30 % by Xp
Y (output power of the controller after 3 minutes)	60 % through Tn

Derivative time Tv

(differential effect of PID controller)

With the differential function a correction factor is entered in the controlled system when the controlled variable begins to differ from the default value. The correcting variable depends on the speed by which the default-to-actual deviation takes place (thus not the actual deviation). The duration of the correction factor is determined by the reproaching time Tv. If the controlled variable does not change, thus the rate of change is "0", the correction factor and the time constants Tv caused by the differential rate drop to "0" (even if the actual value keep deviating away from the default one). The fact that the control causes the actual value to match the default one is caused mainly by the integral portion of the automatic controller. The differential rate often helps implementing the controller result because it acts against the trend to deviate.

4.8.3 Calculating the control parameters

In order for the controller to process actual values of free chlorine and Ph even in the presence of very slight deviations (almost close to the default values), it must be adjusted to the controlled system. This is done via the control parameters Xp for the proportional area, Tn for the reset time of the integral range and the reproaching time Tv for the differential range.

The determination of these settings can take place by means of taking up the step response of the controlled system. In addition the control members must suddenly and manually change from "CLOSE" (0 %) to "OPEN" (100 %) or e.g. from 30 % to 50 %.

The following formula can be used for calculating reference values:

$$Xp \approx 0.83 \cdot \Delta X / \Delta t \cdot Tu$$

$$Tn \approx 3.3 \cdot Tu$$

Variable	Description
Yh	setting range (e.g. valve fully up or 100% of the dosing pump delivery)
Xmax	maximum control variable at 100% dosing rate
ΔX / Δt	Gradient of the measured curve (see Fig. 4.8.3.2)
to	Time of change of control variable Y
Tu	lag time (s)

As we are dealing here with approximate values, a certain improvement of the controlled variable can sometimes be obtained by changing the Xp value after certain time. If the regulation should react too slowly or on the contrary too fast, smaller Xp and smaller Tn would result into a faster automatic controller action and in a larger Xp and/or Tn slower-acting settings.

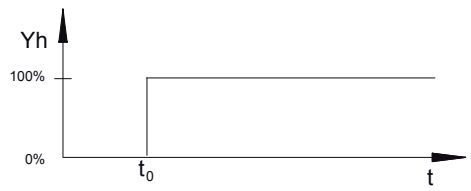

Fig. 4.8.3.1.: Status of the control variable, e.g. valve opening (0% = closed, 100% = open) or dosing rate of a dosing pump.

The following diagram shows the control variable X over time t (see Fig. 4.8.3.2):

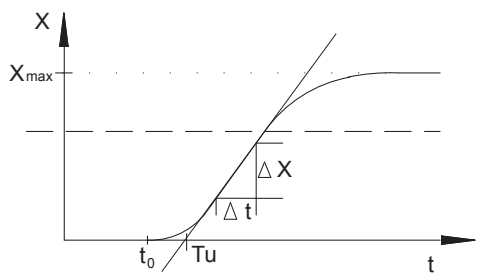

Fig. 4.8.3.2.: Step response of a controller to a change in control variable Y. (X = actual value; e.g. free chlorine or pH value)

4.8.4 Control parameters

Setting range for all control variables:

Xp value	Tn value	pH value
1 - 500 %	1 - 200 min	1 - 1200 s

The following parameters are set by the manufacturer before shipment:

Controller	Xp	Tn	Tv
Disinfection controller	35 %	15 min	OFF
Automatic controller pH value	10 %	15 min	OFF
Conductivity controller (option)	10 %	OFF	OFF

4.8.5 Controller direction

For the pH controller it is possible to select the control direction

- raise pH value (dosing of alkalis)
- lower pH value (dosing of acids)

The setting is made in the menu Main menu>Menu 2>Controller.

NOTICE!
In the standard display an arrow (↑ or ↓) indicates the control direction. The output terminal display also shows the control direction.

4.8.6 Base load metering

A basic load dosage can be configured outside of the range of control. This dosage takes place even if the PID automatic controller output is 0 %. If a basic load is configured, this value is represented in blue on the display screen in the y-display. The y-display of the automatic regulation is represented in green. In the status display, this condition is identified by a "+" after the y-display. It should be noted that this basic load is always effective and independent of the regulation of a certain percentage of the control elements, although the automatic controller does not request any dosage. The basic load is separately adjustable for each output to a maximum of 20 % of the control range.

Main menu >> menu 2 >> controller

4.8.7 Manual operation

Automatic controllers feature the possibility of a manual operation mode.

If an automatic controller is hand-operated, then a large "M" behind the "Y" will appears in the status display and the y-display on screen will be "blue". In addition the hand-operated is indicated in the lower line.

In the menu of the manual settings the controller output can be adjusted to any value between 0 % and 100 % and saved directly.

Main menu >> menu 2 >> controller

NOTICE!
Manual operation is not reset automatically.

Adjustment of shock chlorination

For shock chlorination, the "free chlorine" controller is switched to manual operation for an adjustable time and an adjustable dosing rate. When the time has elapsed, the controller automatically switches to automatic operation.

NOTICE!
The user must empirically define the time and the dosing rate for shock chlorination before this function is performed.

The "shock chlorine" key is used at the same time for configuring and starting shock chlorination. Set the time with the "Time" key. Set the maximum output capacity with the "%" key.

Press the "OK" key to save the settings. The shock chlorination is indicated on the status display. The timer counts down and indicates the remaining time in minutes. When the time has elapsed, the controller automatically switches back to automatic operation.

Main menu >> menu 2 >> controller >> free chlorine >> manual operations

4.8.8 Timer dosing

The controller has a time control function for dosing active oxygen (nitrogen peroxide). This function must be selected in the configuration.

Two settings required:

- Setting the dosing times for all week days in the service menu
- Selecting the dosing rate in menu 2 > controller

4.9 Alarms

4.9.1 Measured value alarm

For each measuring input a minimum and a maximum alarm can be set. If a value is above or below this limit the alarm is shown and an alarm relay changes to a common alarm. The alarm settings of the relay and the automatic controller belonging to this measuring input can be differently evaluated. The time delay of the alarm is adjustable (delay)

4.9.2 Safety cutout (Y alarm)

The controller is equipped with a safety cutout. Should the output power of the controller reach more than 95 % due to unexpected events as for example a faulty sensor, a warning alarm is displayed for the controller to reset the controller power output to 0 %. This function is factory-activated. The time is adjustable.

Moreover adjusted basic loads are switched off in the event of an emergency stop.

All alarms are displayed in text form on the screen. The alarm relay is activated and the reading which caused the alarm is shown in red.

NOTICE!
The alarms are represented in red on the display. After clearing, reset the alarms by pressing twice the OK key button.

4.10 Analogue power outputs 0/4 … 20 mA for remote displays

For the remote display of the readings the controller has an analog output for each reading input 0/4 … 20 mA.

The selection of 0 … 20 mA or 4 … 20 mA is made in the service menu. The adjustment of the outputs to external devices is made however in menu 2 (recorder). Any measurement can be assigned to a minimum value or a maximum value.

To check the outputs and adapt the connected devices the 20 mA outputs can be operated with a test signal (Service > Recorder menu).

The signal can take each value between 0 and 20 mA. That is separately possible for the configured controllers and/or recorder outputs.

NOTICE!
If the 0/4 … 20 mA continuous controller output is configured for a controller, this can be set to the actuator in the output type of the controller irrespective of the Recorder menu setting (Main menu >> Menu 2 >> Service >> Recorder). The control output can be configured to 0 … 20 mA and the recorder outputs to 4 … 20 mA. Note that any changes made in the Recorder menu will reset all the 20 mA outputs.

4.11 Controlling the flocculant pump

This function must be selected in the configuration menu. It can then be activated or deactivated in the Service menu and the flocculant pump running time is set.

4.12 Service menu

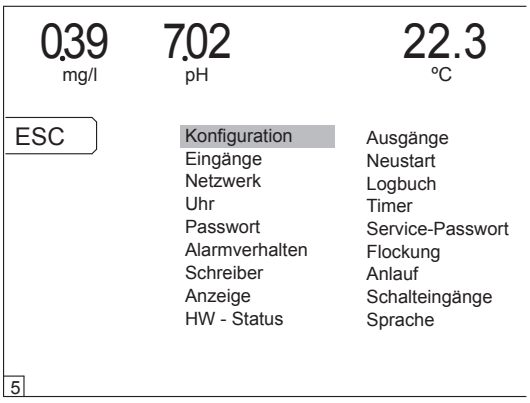

Main menu >> menu 2 >> service

Menu 5 “Service” contains 18 functions for the default setting:

Menu	Key	Function
0.4.4	Configuration	Return to the basic configuration Saving and loading of a configuration
5.01	hardware status	Hard-/software equipment
5.1	Inputs	adjusting the input measuring ranges
5.2	Outputs	Outputs settings
5.3	Autosetup	Automatic determination of the parameters of the "free chlorine" controller
5.4	Reset	reset and factory settings
5.5	Network	Configuration of RS 485 network address
5.6	Log file	write/read the logbook
5.7	Clock	Setting of date and time
5.8	Timer	Setting of control timer
5.9	Password	Setting an access code for individual menus
5.10	Service code	Setting a code for menu 5 „service“
5.11	DIN - contact	Setting ECO mode
5.12	Flocking	Setting of flocking
5.13	Alarm settings	Configuration of alarm settings
5.14	Start	Setting of start-up lag time
5.15	Recorder	Choise 0...20 mA/4...20 mA or test signal
5.16	Digital inputs	Settings of digital inputs
5.17	Display	Display settings
5.18	Language	Changing language and units

On the following pages the individual pages are described.

To select the menus press the arrow keys ▶, ◀, ▲ and ▼. Confirm the selection with the “OK” key.

Menu 0.4.0: Configuration

Configurations of the TOPAX DX can be modified, saved and loaded at any time. Existing configuration files are saved on the memory card or loaded from it.

Main menu >> menu 2 >> service >> configuration ...

... >> change Menu 0.4 (see chapter 4.8)

... ... >> load menu 0.4.20, select an existing configuration with the ▲ and ▼ keys and confirm with "OK".

... >> save menu 0.4.21, save the current configuration to the memory card. The file name can be chosen freely.

For example in this way the TOPAX DX SMART can be configured for several swimming pools circuits once and then be transferred to other, identical TOPAX DX SMART controllers via the memory card. All settings are transferred.

The configuration files can also be saved to a PC and transferred to an identical TOPAX DX SMART if required.

Menu 0.4.1: Configuration

The controller is supplied in accordance with the order and can be started. This menu should only be selected if basic changes are required (e.g. different type of dosing pump or sensor).

Main menu >> menu 2 >> service >> configuration

Before it is saved, the newly set configuration is indicated in red and must be saved. Use the „ESC“ button to exit the menu without saving and return to the default settings.

When new settings are performed and a new configuration is saved, make sure to check all terminal clips. The new wiring diagram is displayed. The system will in fact display the new connection diagram and all terminal clips having been changed will be marked out in red. The new connection diagram must be confirmed.

Inadmissible configurations are blocked. A text error message is shown.

For easier proofing of your configuration, check the terminal clips and their assignment to the outputs in the menu 5.01 “Hardware status”.

The controller is supplied with a measuring log and a terminal connection diagram for the device configuration.

Menu 5.0.1: Hardware status

Main menu >> menu 2 >> service >> HW status

The menu shows:
- Software version
- Running time
- integrated components
- Terminal connection
- hardware status

Menu 5.1: Inputs

Main menu >> menu 2 >> service >> inputs

Measuring range setting for free chlorine.

Menu 5.2: Outputs

Main menu >> menu 2 >> service >> outputs

The menu permits:
- Adjusting the settings of the controller outputs
- Adjusting the maximum limits for the outputs.

Menu 5.4: Reset

Main menu >> menu 2 >> service >> reset

The menu permits
- Reset: Restart the instrument using the same configuration
- default settings: The device must then be completely reconfigured.
- switch off: defined switching off of the controller before disconnection from power supply.

Menu 5.5: Network

Main menu >> menu 2 >> service >> network

The menu permits the RS 485 network address to be set to connect the controller to a PC or network (see chapter 4.14).

Menu 5.6: Log file

Main menu >> menu 2 >> service >> log file

The logbook records all the settings. The logbook file can be read either on the controller or on the PC when the memory card has been removed.

Menu 5.7: Clock

Main menu >> menu 2 >> service >> clock

Any time when you replace the batteries of your instrument you need to access in this menu in order to reset the instrument clock.

The time is automatically changed from summer time to winter time and vice versa. This menu also offers the possibility to deactivate this automatic changeover.

Menu 5.8: Timer

Main menu >> menu 2 >> service >> timer

In this menu you can adjust the timer for active oxygen dosing and allocate to individual week days.

Menu 5.9 and 5.10: code und Service code

Main menu >> menu 2 >> service >> code and service code

In these menus you can block the various levels by using a 4-digits numeric password. Information menus will remain free.

Only 5 minutes after the entry has been made, the password is activated

Menu	Function
5.9 Code	After entering the code, menus „calibrate“ and „set values“ and "menu 2" are only accessible via this code.
5.10 Service code	Enter this code to protect the menu „service" and make accessible only to password users.

If no code is set all program levels are accessible.

Menu 5.12: Flocking

Main menu >> menu 2 >> service >> flocking

Set the parameters required to operate and start the flocking pump. The flocculation pump is operated with a fixed dosing.

Menu 5.13: Alarm settings

Main menu >> menu 2 >> service >> alarm settings

Use this menu to set the behaviour of the controller and the functioning of the alarm relay in case of any alarm to be switched on.
- Controller ON: the controller remains on if an alarm goes on
- Controller OFF: the controller goes off when an alarm goes on and the control valve is overdriven
- Relay ON: the relay is activated when the alarm goes on
- Relay OFF: the alarm relay is activated when energized by the operating current and is deactivated if an alarm goes on.

Menu 5.14: Start

Main menu >> menu 2 >> service >> startup

In this menu you can adjust the start-up lag time of controller functions. The new time becomes effective after the following tasks (see chap. 4.6 "Digital signal inputs").

Menu 5.15: Recorder outputs

Main menu >> menu 2 >> service >> recorder

In this menu you can set the analogue outputs (recorder outputs) between 0 .. 20 mA or 4 .. 20 mA to transfer the readings and to test with an adjustable test signal.

Menu 5.16: Digital inputs

Main menu >> menu 2 >> service >> digital inputs

Menu for switching on and activating the digital inputs. They can be defined as "normally ON" or "normally OFF". If they are not assigned, the digital inputs used for the fill-level gauge of the metering container (that is to switch off the free-chlorine or the ph controller) can be also set on “not active”.

Menu 5.17: Display

Main menu >> menu 2 >> service >> display

The menu permits:

- Assign a name to the device on the display
- Switching on / off additional information on the standard display
- Set the brightness of the display.

Menu 5.18: Language

Main menu >> menu 2 >> service >> language

Menus for setting of menu languages. You can activate additional languages from the memory card.

4.13 Memory card

The memory card transfers and stores language files (from the menu navigation), software updates and acts as a data logger.

4.13.1 Log book function

The following activities are stored in the logbook:

- Configuration of the initial delivery with date and time
- default configuration of date and time
- Change of the automatic controller parameters (Xp, Tn, Tv), basic load, delimitation, being, alarm parameters, and calibration data at start-up with date and time
- Change of the automatic controller parameters (Xp, Tn, Tv), basic load, delimitation, being, alarm parameters, and calibration data with date and time
- Configuration of the digital inputs

This data is stored on the memory card supplied and can be read directly on the device or with a PC.

The software version is stored as is and a file (* LOG) as text file and DATE (* DAT) as recorder file per day.

The data is stored in directories for a month. The data can be viewed at Service > Logbook.

4.13.2 Logbook functions on the PC

The data which is saved on the card can be transferred to a PC by means of a reading device. To remove the memory card, the controller must be switched off in a specific way: in menu 2 >> Service >> reset press the "Switch off" key. All controllers are set to an output capacity of "0%" and all unsaved data is saved to the memory card. The controller can continue to operate without the card.

The device must be opened to remove the memory card. The card is located on the display board.

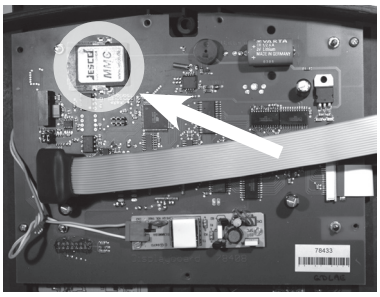

Fig. 4.13.2.1: Slot for the memory card on the display board.

NOTICE!
The memory card must only be inserted or removed when the device is voltage-free. Switch off the TOPAX DX SMART via menu 2 >> Service >> Reset (see chapter 4.12, 5.4).

On its website, the manufacturer provides the free software "TopReader" to read the memory card with the recorder and configuration data.

NOTICE!
Make sure that no additional data is saved on the memory card and that the saved data is not modified (data loss). The memory card must only be formatted in "FAT" format.

4.13.3 Firmware update

New firmware is played from the memory card. The memory card must be used when the power supply is switched off.

When the operating voltage is supplied, the firmware is automatically installed and started.

The new files must first be written to the memory card via a PC. The existing files must be deleted (language file directory LANG in full and 4 firmware files ending *.EEP and *.HEX).

4.14 Connecting to the PC

The controller can optionally be fitted with an RS 485 serial interface. The RS 485 allows you to transfer data to a PC. The data communication protocol installed is MODBUS.

With the RS 485 interface it is possible to connect more than one device to a network. To do this, an address must be assigned to each controller. In addition each controller must be equipped with the RS 485 computer interface.

It is possible to have a maximum of 1000 m of data transfer with the RS 485 interface. Up to 14 devices can be connected to a network via a PC (see Fig. 4.14.3).

NOTICE!
The data line must be attached directly to the connecting terminals of the TOPAX DX SMART (terminals a and B, see Fig. 4.14.1). Separate clamping or branching boxes should not be set. The network address 10 is not permitted.

IMPORTANT!
To incorporate a bus system on a PC use a "KAT.5 type 2X2XAWG24/1 (Lapp cable)" computer lead or better. Using other cables can cause data errors and affect the data communication.

Modern PCs are fitted with USB ports. To connect to an RS 485 network you need an additional interface converter (RS 485 to USB, part no. 44300102).

The interface module is located on the main board in the rear housing section. It is partially hidden from view by the output module.

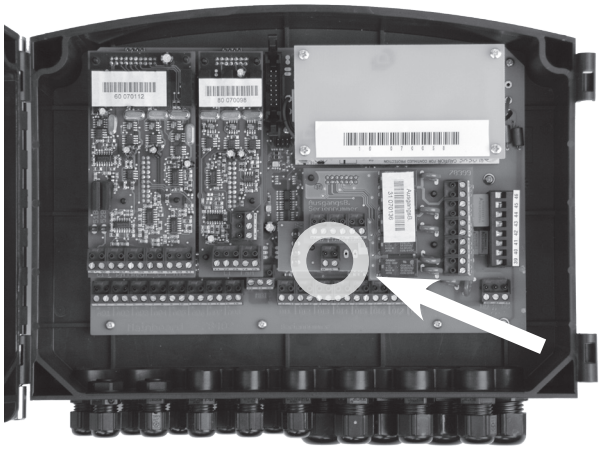

Fig. 4.14.1: RS 485 connections on the interface component's board partially hidden from view by the output components

NOTICE!
The data line must be closed on both ends of the network with a 120 Ohm line resistor and must be routed to a fixed potential with pull-up/pull-down resistors on the last TOPAX in the network.

To connect the 120 Ω resistor to the side of the controller and to switch the pull-up/pull-down resistors, two jumpers must be connected to the TOPAX DX SMART (the last one in the network). The resistances are not active in its delivered state. The 120 Ω resistor is applied at the PC side via the interface converter.

The jumper slots are located in the front of the housing on the display board, above the flat band-connection to the main board.

TopView Software

For the remote indication a visualization program is offered in two versions. The program TopView mini is free of charge and can be downloaded from Internet.

resistances are NOT activated (delivery status)	**resistances are activated (last device in the network)**
Jumper position: OFF	Jumper position: ON
The resistances are NOT active. jumpers are set DOWN	The resistances are active. jumpers are set UP
	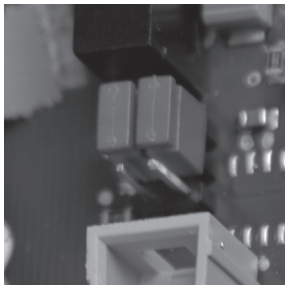

Fig. 4.14.2: Position and setting of the jumpers to activate the RS 485 resistors on the last TOPAX DX in the network.

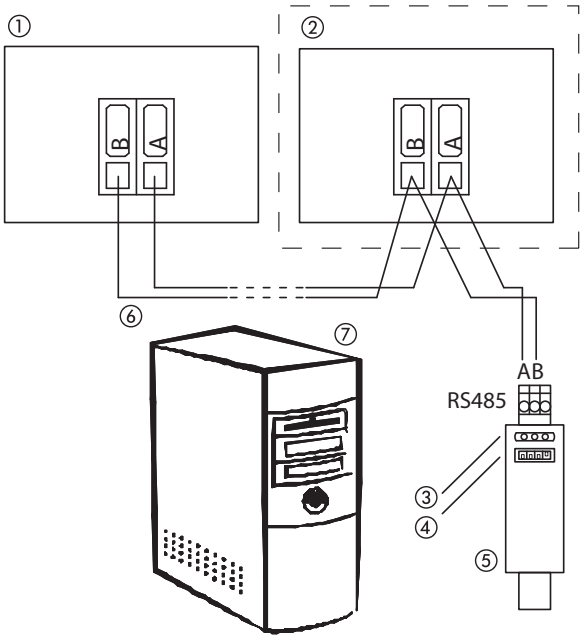

Fig. 4.14.3: RS 485 network installation with two controllers: ① controller 1 (activate terminal resistors on the display board), ② controller 2 (optional), ③ LEDs (yellow: voltage, red: signal request from PC, green: signal/reply from controller), ④ terminal resistors, ⑤ RS 485 - USB interface converter, ⑥ RS 485 network (max. length 1,000 m), ⑦ PC with TopView software

5. Installation and Commissioning

5.1 Tools required

The following tools are required to set up the water sampling station:

- Drill machine with 8 mm masonry drill
- Open-end spanner set 10-27 mm
- Suitable cutter
- Flat tip and Philips screwdrivers
- 3 and 4 mm Allen key
- PTFE tap, sealant for injection nozzle

5.2 Wall mount

The following criteria must be taken into account when selecting the assembly location:

- Level surface
- Water sampling station moves out to the left.
- The assembly height must be selected so that the operator can easily fit the sensors to the top of the station. The controller display should be in lie with the eyes of the operator.
- Above the station there must be at least 25 cm free space to handle the glass electrodes.
- Below the water sampling station there must be at least 20 cm free space to route the hoses.
- No damp-sensitive components below the water sampling station
- A damp room SCHUKO socket outlet with continuous current, max. 1.5 m away.
- All hoses and cables must be routed without twists.
- No hose line longer than 5 m.
- Avoid direct sunlight or heat radiation.

Unscrew the wall bracket from the water sampling station and fit it to the wall. The screws supplied are suitable for masonry. The left side of the wall bracket must be aligned vertically with a spirit level. After assembly, put the water sampling station back in the wall bracket and attach the hinges.

5.3 Electrical connection

All work on the electrical installation must only be carried out by authorised and qualified electricians.

The water sampling station is pre-wired. The device is equipped with a mains connector. The 230 V socket must be protected with max. 5 A fuse.

NOTICE!
The device must be supplied with continuous current. The logical locking with the filter controller is performed via control contacts as required. When the water is not moving the controller automatically interrupts dosing.

NOTICE!
Only work on electrical connections while the device is disconnected from the power supply.

For all other connections refer to the device details *for the controller.*

5.4 Connection to the pool water circuit

NOTICE!
Before working on the pipeline system switch off the bathing water circulation and close the valves before and behind the installation location. Secure the system against accidental power-up.

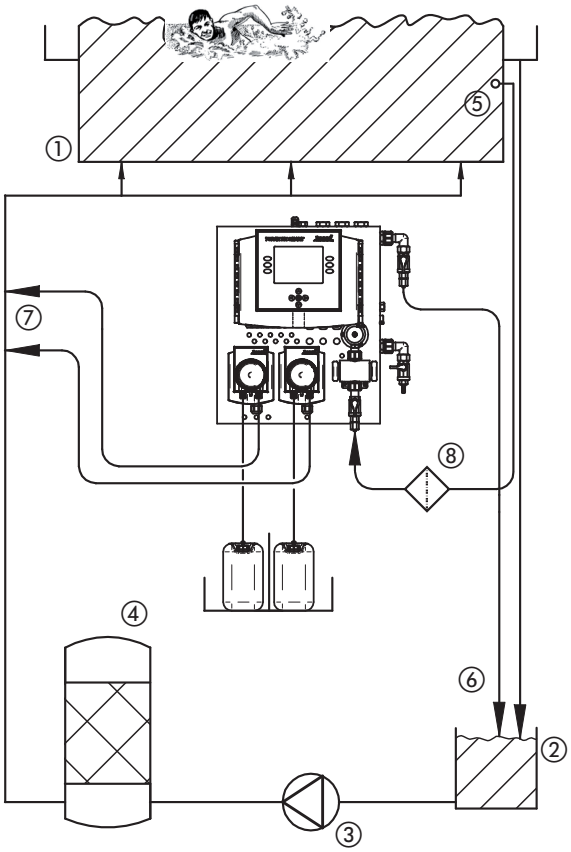

Fig. 5.4.1: Functional diagram of a swimming pool water system with an overflow channel

① Swimming pool
② Splash water tank
③ Circulation pump
④ Filter
⑤ Sample water removal
⑤ Sample water return
⑦ Injection nozzles for disinfectant and pH-adjusting solution
⑧ Sample water filter

For swimming pools with a splash water tank the sample water is removed directly from the pool, approx. 20 cm below the water surface. For pools without a splash water tank it is between the circulation pump and filter.

The injection nozzles for disinfectant and pH adjusting solution are fitted in the line between the filter system and pool inlet. If a flow-through chlorine electrolysis system is used for disinfection, the acid injection nozzle must be fitted in front of the electrolysis cell.

5.4.1 Sample water supply

For shipping purposes all the water connections for the water sample station have been unscrewed and must be refitted to the water sampling station. Refer to the station scale drawing for the correct positioning.

The correct hose and connections for the pipe system are included in the delivery supply. The screw-in connections are sealed with PTFE tape. The hose should be installed without kinks.

Hose connection

- Cut off the hose at right angles with a sharp knife.
- Push the union nut onto the hose.
- Push the hose onto the cone of the connection.
- Tighten the union nut carefully. (Plastic!)

NOTICE!
For subsequent maintenance work it is useful if shut-off valves can be fitted to all site connection points.

NOTICE!
If there are likely to be coarse particles in the sample water, a sample water filter must be installed (see chapter 8).

5.4.2 Dosing system assembly

An injection nozzle, pressure line and suction line are supplied with each peristaltic pump. The injection nozzle is immersed with the transparent hose in the pipeline. It is screwed in the arrow direction and sealed with PTFE tape.

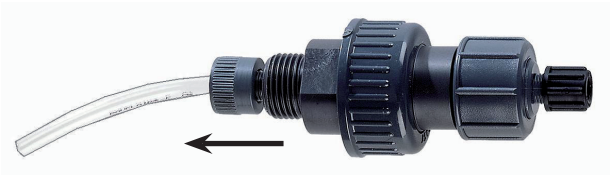

Fig. 5.4.2.1: Injection nozzle (the arrow points in the direction of the pipeline)

Suitable dosing hose for routing between the peristaltic pump and the injection nozzle is included in the supply. The suction hose and pressure line should be routed without kinks. Note the peristaltic pump entry and exit points.

Fig. 5.4.2.2: Dosing line hose connection

Hose connection

- Cut off the hose at right angles with a sharp knife.
- Push the union nut onto the hose.
- Push the clamping ring onto the hose (note the alignment).
- Push the hose onto the tap of the connection.
- Push on the clamping ring.
- Tighten the union nut carefully. (Plastic!)

NOTICE!
The peristaltic pumps are only controlled after the sensors have been calibrated to ensure imprecise measurements do not result in faulty dosing. The suction lines should only be immersed in the chemical containers when the calibration has been successfully completed.

NOTICE!
Chlorine bleach (natrium hypochloride solution) must never be mixed with acid. Poisonous chlorine gas would be released immediately. For this reason warning notices accompany systems for using chlorine bleach. These must be attached close to the system.

5.4.3 Adjusting the sample water flow

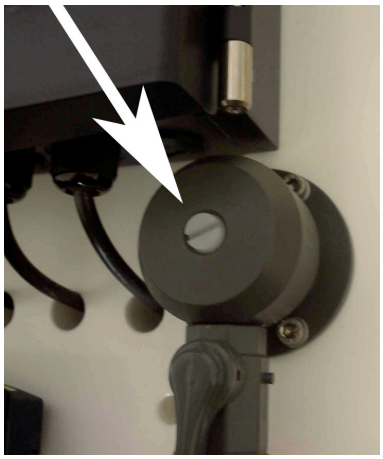

Fig. 5.4.3 Adjustment valve

Set all the valves on the sample water line to the 100% open position. When operating the filter pump the water flow is adjusted via a screwdriver on the needle valve. (arrow)

- Close the valve fully (clockwise)
- The controller shows "insufficient sample water".
- Slowly open the valve (anti-clockwise) until the "insufficient sample water" display goes out.
- Check by applying the inlet ball valve. The "insufficient sample water" display appears when the ball valve is closed and goes out again when it opens.

For water sampling stations with a chlorine measuring cell the correct sample water flow is set when the glass balls in the measuring cell for cleaning the electrodes safely reach the highest point of the measuring cell.

IMPORTANT!
The needle valve is used to adjust the water flow. The ball valves must be used to stop the water.

NOTICE!
The "insufficient sample water" display responds with a maximum 1 second delay.

5.5 Fitting and calibrating sensors

The mounting of sensors to the water sampling station depends on the equipment chosen. The handling of all optionally available sensors is described. The assembly locations are indicated by stickers. Use the multi-lingual sticker set for this. The graphic on the sticker set shows the locations for the adhesive stickers.

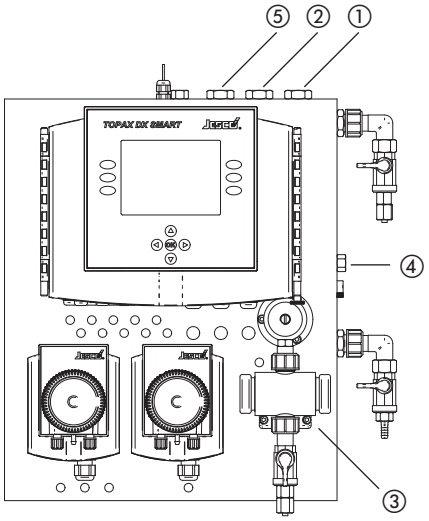

Fig. 5.5.1 Sensor assembly location

① pH sensor
② REDOX sensor (depending on model)
③ Free chlorine sensor (depending on model)
④ Temperature sensor (depending on model)
⑤ Conductivity sensor (depending on model)

pH and REDOX electrodes

pH and REDOX electrodes are filled with an electrolyte and must always be kept damp. They should therefore only be fitted if the water sampling station is already filled with water. Make sure the cap is removed from the electrode prior to installation.

Installation

To install the electrodes the ball valves on the water sampling station input and output are closed and the electrodes are screwed into the top of the water sampling station. The O-ring of the electrode seals the system. It is normally sufficient to screw them in manually.

NOTICE!
Crystal formation on or in the sensor is not a fault. The crystals will dissolve again during operation.

The measuring cables with electrode connectors are factory-fitted to the controller and labelled near the electrode connector with "pH" or "REDOX".

IMPORTANT!
The connector must always be kept dry. Otherwise the reading could be corrupted.

Calibration

The electrodes must be operated for approx. 1 hour with pool water prior to calibration. They must be removed for calibration. To do this the ball valves at the input and output points of the water sampling station must be closed.

NOTICE!
This will not loosen the cable from the electrode. The connector allows for a rotary movement between the electrode and the cable.

Calibration is described in detail in the controller operating manual.

Chlorine measuring cell

The chlorine measuring cell is located directly at the water inlet at the bottom right of the water sampling station. It is fitted and connected at the factory. In the chlorine measuring cell valve balls moved by the water flow ensure continual cleaning of the electrodes.

Calibration

Before the chlorine measuring cell is calibrated the sample water should flow for at least 1 hour. A photometer or a measuring instrument according to the DPD method is required for calibration.

The chlorine measuring cell can only be calibrated if disinfectant has already be dosed in the pool circuit. You should therefore run the disinfection in manual mode until the chlorine measurement shows a deflection. Then stop manual dosing and calibrate the chlorine measuring cell.

Calibration is described in detail in the controller operating manual. For zero point calibration the ball valve at the input of the water sampling station is closed. Do not adjust the flow adjustment valve. For DPD reference measurement a water sample is taken directly from the water sampling station. Flush the ball valve well with sample water before taking the actual sample.

The chlorine measuring cell calibration should be repeated at the latest 24 hours later. This will give the electrodes time to adapt to the operating conditions.

NOTICE!
The efficiency of the chlorine is heavily dependent on the pH value. Final calibration of the chlorine measuring cell can therefore only take place when the pH value has stabilised to its target value.

Temperature sensor

The temperature sensor is fitted and connected at the factory. It does not require calibration.

Conductivity measuring cell

The conductivity measuring cell is factory-fitted at the top of the water sampling station. To protect it during transport the connector is loosened and must be refitted during start-up.

Calibration is described in detail in the controller operating manual.

5.6 Starting automatic mode

Presetting of the control parameters is appropriate for many swimming pool applications not in accordance with DIN 19643. For this reason the control system can be switched on initially without changing the control parameters. If this does not produce a good control result, the parameters can subsequently be changed (see controller description).

Provide the chemical supply for the pH adjustment and disinfection in turn by inserting the suction lines in turn into the vessel.

Note how the dosing starts each time via the peristaltic pump. Do not start dosing the disinfectant (or start the flow-through chlorine electrolysis) until the measured pH value has reached its target value and dosing of the pH adjustment solution has finished.

CAUTION!
The chemicals can be hazardous in concentrated form. Handle them therefore with care. Always use suitable protective clothing for hands, body and mouth/nose when handling chemicals. Avoid using exposed chemicals. Read the chemicals' safety data sheets in detail and follow the instructions on the packaging of the chemicals.

Observe the system in operation. If there are any faults to the controller or the peristaltic pumps, or if there are major deviations between the readings and the target values, consult the troubleshooting section.

IMPORTANT!
Re-calibrate all sensors 24 hours after the initial installation.

6. Shutdown, Recommissioning and Disposal

No special measures are necessary for brief shutdowns of the unit (e.g. a few days).

For longer periods of inactivity over several weeks or for example over winter we recommend:

- Removing the suction lines from the chemical supply tanks and flushing them with water.
- Closing the chemical supply tanks, storing them in a cool, dry location and protecting them from UV radiation.
- Flushing the peristaltic pumps with water. Operating the controller in manual mode.
- Disconnecting the unit from the mains.
- Stopping the sample water supply.
- Draining the water sampling station and peristaltic pumps. To do this open all the valves and unscrew the temperature sensor or the plug.
- Keep the glass electrodes (pH and REDOX electrodes) damp. Fill the transport caps with water and fit them on the electrodes or place the electrodes in a container with water.
- Store the electrodes in a frost-free environment.

NOTICE!
Over long periods of inactivity an oxide layer forms on the copper electrode of the chlorine measuring cell. This must be removed when the unit is recommissioned. (see chapter 7, maintenance)

Recommissioning

After a long period of inactivity, e.g. winter break, the TOPAX DX SMART must be operated for approx. 12 … 24 h before the measuring inputs are calibrated with the housing closed. This will prevent the high impedance measuring inputs of the pH and REDOX electrodes from failing due to humidity (condensation).

For short periods of inactivity we recommend leaving the TOPAX DX SMART switched on.

Disposal of old units

If the equipment is to be disposed of after its service life, it must be thoroughly rinsed and dewatered. The equipment was manufactured in accordance with the ROHS guideline and the waste electrical equipment legislation. The manufacturer will take care of disposal if the equipment is returned free of charge. It is not part of domestic waste. When returning the unit please also fill out and return the declaration of no objection.

7. Maintenance and Care

The water sampling station has been designed to the highest quality standards and has a long service life. Some parts are subject to wear due to chemical and mechanical loading. Regular visual inspections are therefore necessary in order to ensure a long operating life. Regular preventative maintenance of the unit protects it against operational failures.

7.1 Regular inspection

Regular operating inspections are restricted to replacing the empty chemical supply tanks and for example the monthly calibration of the pH and REDOX measurement and if necessary the chlorine measurement.

NOTICE!
The service life of the glass electrodes depends on the operating conditions and the water properties (e.g. hostility, grease etc.). In normal conditions the service life will be 12 … 15 months, which includes 50% storage time.

7.2 Annual maintenance

The frequency of the maintenance is only conditionally dependent on the intensity of its use. The chemical wear, for example of rubber parts, starts with the first medium contact and is then irrespective of its type of use.

The following tasks should be performed:

- Visual inspection of all components
- Cleaning of water guiding components
- Seal replacement
- Pump hose replacement
- Injection nozzle maintenance
- Sensor check

Chlorine measuring cell maintenance

The chlorine measuring cell is disassembled and visually assessed during maintenance.

The platinum electrode must be a spiral with a constant winding gap and must have no visible damage.

The large copper (or silver) electrode must not be washed out by the cleaning balls. Oxide layers can be removed by sanding down with a fine paper (e.g. 800 grain) on the surface indicated with an arrow.

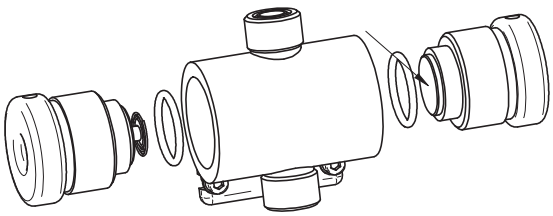

Fig.7.2.1: Chlorine measuring cell CS120

Be aware of the glass balls when assembling the chlorine measuring cell. They must not lie in the thread or on the O ring contact surface. The terminal screws for the electrodes must be tightened carefully (plastic!).

Check the glass balls and replace if necessary.

7.3 Adjusting the flow monitor (insufficient sample water)

If the flow monitor contact does not switch correctly it can be re-adjusted.

- Allow sufficient sample water to flow.
- Undo the cable screw connection of the flow monitor until the flow monitor on the cable can move.
- Push the flow monitor in until the controller shows insufficient sample water.
- Pull out the flow monitor by approx. 1 cm. The message goes out.
- Tighten the cable screw connection.
- Test operation by closing off the sample water supply.

7.4 Peristaltic pump maintenance

See also attached peristaltic pump operating manual.

8. Spare parts, Consumables and Accessories

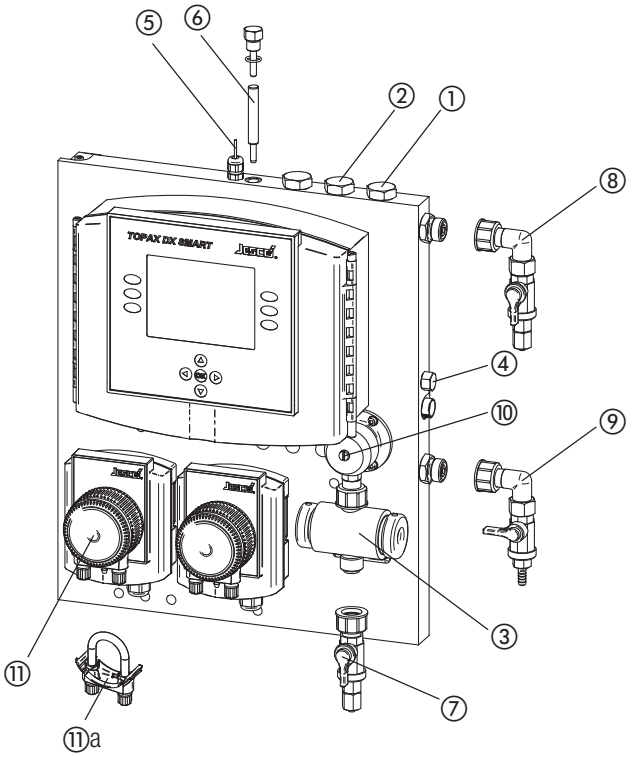

Fig. 8.1 Spare part locations

Components, options, spare parts and function	Part No.
Output board	78399
Chlorine/pH/REDOX/Temp input board	78403
Conductivity input board 1)	78404
RS 485 serial interface board	78406
Hinge axis complete	38336
Memory card	78405
1) Additional components and software are needed for conductivity measurement.	

Table 8.2 Controller spare parts

	Description	Part No.
①	pH electrode	41100004
②	REDOX electrode, platinum	41100011
	REDOX electrode, gold (for saline bathing water)	41100019
	Connecting cable for pH or REDOX electrodes	78148
	Set of buffer solutions for pH and REDOX	78004
③	Chlorine measuring cell CS120 platinum/copper	23722968
	Chlorine measuring cell CS120 platinum/silver (for saline bathing water)	23732271
	Maintenance kit for CS120 (seals and ball valves)	38660
	Copper electrode (flat)	22307
	Platinum electrode (spiral)	22306
	Silver electrode (flat)	35506
④	Temperature sensor Pt 100	41100022

Table 8.3: Sensors, spare parts for sensors and consumables

	Description	Part No.
⑤	Flow monitors	79252
⑥	Float for flow monitor	38560
⑦	Inlet connection kit	38657
⑧	Outlet connection kit	38658
⑨	Sample tap connection kit	38659
⑩	Adjusting spindle for needle valve	38630
-	Seal kit for chlorine measuring cell CS120 (without measuring cell)	38656

Table 8.4: Water sampling station spare parts

Item	Description	Part No.
⑪	Peristaltic pump complete	11001000
⑪a	Replacement hose pre-assembled	38106
-	Spare rotor with rollers	38105

Table 8.5: Peristaltic pump spare parts

	Description	Part No.
	Suction line type SA	12224451
	Dosing hose, sold by the metre	97389
	Injection nozzle, model SKD	12300010
	Sample water line, sold by the metre	97175
	Sample water connection with G1/4 male connector	26489
	Sample water filter, PE hose connection 6/8	38744
	Sample water filter, PE hose connection 6/12	38745
	Replacement filter for sample water filter	38702

Table 8.5: Accessories and consumables

9. Troubleshooting

9.1 Troubleshooting and diagnostics

All errors are indicated in text form on the display of the TOPAX DX SMART. If there are several errors at the same time, the error messages can be called up with the ▲ and ▼ keys. The system displays the following alarm and messages:

Self-setting alarms

Display	Possible causes	Response from the TOPAX DX SMART		Suggestion of possible remedies
		Alarm relay	Controller output at 0%	
System Start	Controller starts	Not activated	Yes (all)	System trigs back to normal operation after lag time
Keyboard locked	Keyboard lock is ON (max. 60 sec)	Not activated	No	
Sensor alarm	Input current < 4mA, input current > 21mA, or input module faulty	activated	Yes, assigned to input	• Check sensors connection • Replace input module
[measurand] not calibrated	The corresponding measurand is not calibrated.	Not activated	No, the measuring input works with standard values	The corresponding measuring input must be calibrated.
[Measurand] calibration not OK	• Insufficient resistivity of the electrode • Zero point drift too large	Not activated	No	Change buffer solution or replace electrode
	Sensor or single-rod measuring cell not compliant to DIN Standards			Check and eventually replace the input sensor
	Defective input module			Check and eventually replace the input sensor
Manual operation	Manual operation started.	Not activated		
Filter backwash	Filter backwashing has been started manually, the external contact is activated.	Not activated	Yes	The system sets automatically after due lag time a
Insufficient sample water	Insufficient sample water. Through-flow contact faulty. Not displayed during calibration.	activated	Yes (all)	• Provide bigger water flow • Check through-flow contact
Low level alert	Chemicals container is nearly empty	activated	No	Fill up chemical agents or change container
Level main alarm	Chemicals container is empty	activated	Yes	

Displays that must be confirmed with "OK"

Display	Possible causes	Response from the TOPAX DX SMART		Suggestion of possible remedies
		Alarm relay	Controller output at 0%	
Max-Alarm	Measuring value max settings were exceeded	activated	programmable	• Check measurement or sensor • Adjust controller's parameter
Min-Alarm	Measuring value min settings falled below	activated	programmable	
Y-Alarm	Safety shut off (see paragraph 9.2)	activated	programmable	

9.2 Fault resolution

Type of fault	Possible cause	Corrective measures
Insufficient water flow. Can be identified through insufficient movement of ball valves in chlorine measuring cell or "insufficient sample water" display	Needle valve set incorrectly	Re-adjust the needle valve. (see start-up)
	Shut-off valve in sample water line is not fully open.	Check opening level of all valves
	Sample water filter blocked.	Clean filter or replace filter insert
	Chorine measuring cell inlet nozzle blocked.	Clean chlorine measuring cell and fit a sample water filter.
	Sample water contact moved or faulty.	Re-adjust or replace the contact.
	Insufficient water pressure.	Restrict the valve in the pool circuit or fit a sample water pump.
Disinfection controller display fluctuating although the hand measurement gives stable readings.	Fluctuating pH value in water causes significant change in efficiency of disinfectant. (The hand measurement is not affected)	Stabilise the pH reading through appropriate controller adjustment.
	Potential carry-over through electrical devices in the pool circuit	Compensate potential: insert metal parts in front of and behind the water sample station in the sample water line and connect them together.
pH and REDOX measurements cannot be calibrated	Probe cables swapped	Fit the cables correctly
	Probes are used up	Fit new probes
Significant wear to chlorine measuring cell electrodes	Water flow rate too high	Reduce water flow until the measuring cell ball valves just reach the highest point.
	Copper electrode heavily worn in salt water.	Use silver electrode
	Particles in sample water (e.g. sand)	Fit sample water filter.

Device revision

This operating manual applies to the following devices:

Device type:	Revision	Software version
EASYPOOL SMART 02	> 05/2009	-
TOPAX DX SMART	> 01/2008	> 1.11.11

It contains all the technical information required for installation, start-up and maintenance. Should you have any questions or require further information regarding this operating manual, please contact the manufacturer or their official national representative.

Index

A

Actual value ... 22
Adjustment valve ... 30
Alarms ... 24
Alarm settings ... 24,26
Analog current outputs ... 25
Automatic controller outputs ... 22

B

Base load metering ... 24

C

Calculating the control parameters ... 23
poorly calibrated ... 18
Calibrating sensors ... 31
Clock ... 26
Conductivity measurements input ... 21
Configuration ... 25
Control deviation ... 22
Controller continuous output ... 22
Controller direction ... 24
Controller parameters ... 24
Controller pulse frequency ... 22
Controller pulse length ... 22
Control parameters ... 32
Control variable Y ... 22

D

data line ... 28
Date and time ... 27
Digital inputs ... 27
Digital signal inputs ... 21
Dimensioned drawing ... 7
Dimensions ... 8
Display ... 17,27
display ... 36
Disposal ... 33
Dosing system assembly ... 30

E

Electrical connection ... 29
Electronic output ... 22

F

Filter cleaning ... 21
Flocking ... 26
Flocking pump ... 25
Free chlorine measurements input ... 18

H

Hardware status ... 26
Help function ... 17
Hose connection ... 30
Housing ... 9

I

Injection nozzle ... 30
Inputs ... 26
Installation ... 29
Installation height ... 29
Installing sensors ... 31
Insufficient sample water ... 30
Interruption in operation ... 33

L

Language ... 27

M

Main menu ... 18
Maintenance ... 34
Manual operation ... 24
Measured value alarms ... 24
Measuring input for “pH value” ... 19
Measuring input for temperature ... 21
Measuring inputs ... 18
Memory card ... 27
menu structure ... 17

N

Network ... 26
Network address ... 26

O

ON/OFF controller ... 22
Optocoupler output ... 22
Output limit switch ... 22
Outputs ... 26

P

Password ... 26
PC ... 27
PC connection ... 27
P controller ... 22
pH electrode ... 31
pH value ... 19
PI controller ... 23
PID Controller ... 23
Proportional range Xp ... 22
Pulse length ... 22

R

Recorder outputs ... 26
Redox calibration ... 20
Redox electrode ... 31
Redox measurements input ... 20
Relay output ... 22
Reset ... 26
Reset time Tn ... 23
RS 485 ... 27

S

Safety instructions ... 3
Safety shut off ... 24
Sample water filter ... 30
Sample water flow ... 30
Sample water removal ... 29
Service code ... 26
Service menu ... 25
Shock chlorination ... 24
Socket ... 29
Spare parts ... 35
Start ... 26
Start-up ... 29
start-up lag time ... 21

T

Target value ... 22
Technical data ... 7
Technical specifications ... 8
Temperature ... 21
Temperature sensor ... 32
Terminal clips diagrams ... 10
Types of output ... 22

W

Wall holder ... 29
Wall mount ... 29
Winter ... 33

Y

Y-Alarm ... 24

Notes

Notes

EU-Konformitätserklärung
Der Unterzeichnete Lutz-Jesco GmbH, Am Bostelberge 19, 30900 Wedemark, bestätigt, dass die nachfolgend bezeichneten Geräte in der von uns in Verkehr gebrachten Ausführung die Anforderungen der harmonisierten EU-Richtlinien, EU-Sicherheitstandards und produktspezifischen Standards erfüllen. Bei einer nicht mit uns abgestimmten Änderung der Geräte verliert diese Erklärung ihre Gültigkeit.

(EN) EU Certificate of Conformity
The undersigned Lutz-Jesco GmbH, Am Bostelberge 19, 30900 Wedemark. hereby certifies that, when leaving our factory, the units indicated below are in accordance with the harmonised EU guidelines, EU standards of safety and product specific standards. This certificate becomes void if the units are modified without our approval.

(FR) Certificat de conformité aux directives européennes
Le constructeur, soussigné: Lutz-Jesco GmbH, Am Bostelberge 19, 30900 Wedemark, déclare qu'à la sortie de ses usines le matériel neuf désigné ci-dessous était conforme aux prescriptions des directives européennes énoncées ci-après et conforme aux règles de sécurité et autres règles qui lui sont applicables dans le cadre de l'Union européenne. Toute modification portée sur ce produit sans l'accord express de Jesco supprime la validité de ce certificat.

(ES) Declaración de conformidad de la UE
El que subscribe Lutz-Jesco GmbH, Am Bostelberge 19, 30900 Wedemark, declara que la presente mercancía, objeto de la presente declaración, cumple con todas las normas de la UE, en lo que a normas técnicas, de homologación y de seguridad se refiere, En caso de realizar cualquier modificación en la presente mercancía sin nuestra previa autorización, esta declaración pierde su validez.

(NL) EU-overeenstemmingsverklaring
Ondergetekende Lutz-Jesco GmbH, Am Bostelberge 19, 30900 Wedemark, bevestigt, dat het volgende genoemde apparaat in de door ons in de handel gebrachte uitvoering voldoet aan de eis van, en in overeenstemming is met de EU-richtlijnen, de EU-veiligheidsstandaard en de voor het product specifieke standaard. Bij een niet met ons afgestemde verandering aan het apparaat verliest deze verklaring haar geldigheid.

(HU) EG (EK)– Egyezőségi nyilatkozat
A Lutz-Jesco GmbH, Am Bostelberge 19, 30900 Wedemark ezúton kijelenti, hogy a szóban forgó termék annak tervezése és szerkezeti módja, valamint forgalomba hozott kivitele alapján a vonatkozó alapvető biztonság technikai és egészségügyi követelményeknek és az alábbi felsorolt EG –irányelveknek minden szempontból megfelel. A terméken engedélyünk nélkül végrehajtott módosítások következtében jelen nyilatkozat érvényét veszíti.

Bezeichnung des Gerätes:	**Messwassertafel**
Description of the unit:	**Water sampling station**
Désignation du matériel:	**Tableau d'eau de mesure**
Descripción de la mercancía:	**Placa electrónicas**
Omschrijving van het apparaat:	**Meetwaterbord**
A termék megnevezése:	**Mérőtábla**

Typ / Type / Tipo / Típusjelölés:	EU-Richtlinie / EU directives/ Directives européennes / Normativa UE / EU-richtlijnen / Vonatkozó EG-irányelvek	Harmonisierte Normen / harmonized standards / Normes harmonisées / Estándares acordemente / Toegepaste normeringen / Hatályos normák
EASYPOOL SMART 02	**2006/95/EG**	**EN 61000-6-2 : 03.06**
	2004/108/EG	**EN 61000-6-3 : 06.05**
		EN 61000-4-2 : 12.01
		EN 61000-4-3 : 12.06
		EN 61000-4-4 : 07.05
		EN 61000-4-5 : 12.01
		EN 61000-4-11 : 02.05
		EN 61000-4-6 : 12.01
		EN 55022 : 2003
		EN 55011 : 08.03

i.V. Dipl. Ing. Klaus Albert
Lutz-Jesco, Wedemark, 31.03.2008

Technische Leitung / Technical Departement Manager / Direction technique / Dirección Técnica / Hoofd technische dienst / Műszaki irodavezető

CE-Messwassertafel-V02

Declaration of no objection

Please copy and enclose with the device!

Please attach it to the outer side of the packing!

Declaration of no objection

(Please fill out separately for each unit – pump or accessory)

We forward the following device for repairs:

type: EASYPOOL SMART 02.....

Part No.: .....

Serial number: .....

Date of delivery: .....

Reason for repair: .....

Medium conveyed: .....

Properties: .....

We hereby certify that the product has been cleaned thoroughly inside and outside before returning, that it is free of hazardous materials (i.e. chemical, biological, toxic, flammable, and radioactive material) and that the lubricant has been drained. *)

If the manufacturer find it necessary to carry out further cleaning work, we accept the charge will be made to us.

We assure that the aforementioned information is correct and complete and that the unit is dispatched according to the legal requirements.

Company: .....

.....

Address: .....

.....

.....

Telephone: .....

.....

Fax: .....

.....

Customer No.: .....

Contact person: .....

Date: .....

Signature / stamp .....

*) If not applicable please cross out!

Warranty claim

Please copy and enclose with the device!

If the device breaks down within the period of warranty, please return it in a cleaned condition with the complete warranty application, filled out.

Sender

Company:.....

Address:.....

.....

.....

.....

Date:.....

Contact person: .....

Telephone:.....

The device

Manufacturer order No.: .....

Date of delivery:.....

Device type:.....

Serial number: .....

Description of fault:.....

.....

.....

.....

Type of fault:

1. Mechanical fault .....
   Premature wear .....
   Wearing parts .....
   Breakage/other damage .....
   Corrosion.....
   Damage in transit.....

2. Electrical fault .....
   Connections, connectors or cables loose .....
   Operating controls (e.g. switches / push-buttons).....
   Electronics.....

More specifications

Location/description of installation: .....

Accessories used (e.g. sensors, etc.):.....

.....

Commissioning (date):.....

Running time (approx. operating hours): .....

Please describe the specific installation and enclose a simple drawing of the chemical feed system, showing materials of construction, diameters, lengths and heights of suction and discharge lines.

Lutz-Jesco GmbH

Am Bostelberge 19
30900 Wedemark
Germany

Tel.: +49 5130 5802-0
Fax: +49 5130 580268
info@lutz-jesco.com
www.lutz-jesco.com/de

24h-Hotline: +49 5130 580 280

Austria

Lutz-Jesco GmbH
Aredstraße 7/2
2544 Leobersdorf
Austria

Tel.: +43 2256 62180
Fax: +43 2256 6218062
info@lutz-jesco.at
www.lutz-jesco.at

Great Britain

Lutz-Jesco (GB) Ltd.
Gateway Estate
West Midlands Freeport
Birmingham B26 3QD
Great Britain

Phone: +44 121 782 2662
Fax: +44 121 782 2680
info@lutz-jesco.co.uk
www.lutz-jesco.co.uk

Netherlands

Lutz-Jesco Nederland B.V.
Nijverheidstraat 14 C
2984 AH Ridderkerk
Netherlands

Tel.: +31 180 499460
Fax: +31 180 497516
info@lutz-jesco.nl
www.lutz-jesco.nl

Hungary

Lutz-Jesco Üzletág
Vasvári P. u. 9.
9024 Györ
Hungary

Tel.: +36 96 523046
Fax: +36 96 523047
info@lutz-jesco.hu
www.lutz-jesco.hu

USA

Lutz-JESCO America Corp.
55 Bermar Park
Rochester, NY 14624
USA

Tel.: +1 585 426-0990
Fax: +1 585 426-4025
mail@jescoamerica.com
www.jescoamerica.com

East Asia

Lutz-Jesco East Asia Sdn Bhd
6 Jalan Saudagar U1/16
Hicom Glenmarie Industrial Park
40150 Shah Alam /Selangor
Malaysia

Tel.: +603 5569 2322
Fax: +603 5569 1322
info@lutz-jescoasia.com
www.lutz-jescoasia.com

Middle East

Lutz-Jesco Middle East FZE
P.O. Box 9614
SAIF-Free Zone Center
Sharjah
UAE

Tel.: +971 6 5572205
Fax: +971 6 5572230
info@jescome.com
www.jescome.com

ISO 9001:2008
ISO 14001:2004
DEKRA Certification
DEKRA
Certified

Quality Management
ISO 9001:2008
Environmental Management
ISO 14001:2004
Voluntary participation in regular monitoring

Best.-Nr. BA-42410-02-V02
Technische Änderungen vorbehalten
© Lutz-Jesco GmbH 07.2010
Printed in Germany

TOPAX is a registered trade mark of Lutz-Jesco GmbH, Wedemark