CSO/STORMWATER MANAGEMENT

HYDROVEX® VHV / SVHV

Vertical Vortex Flow Regulator

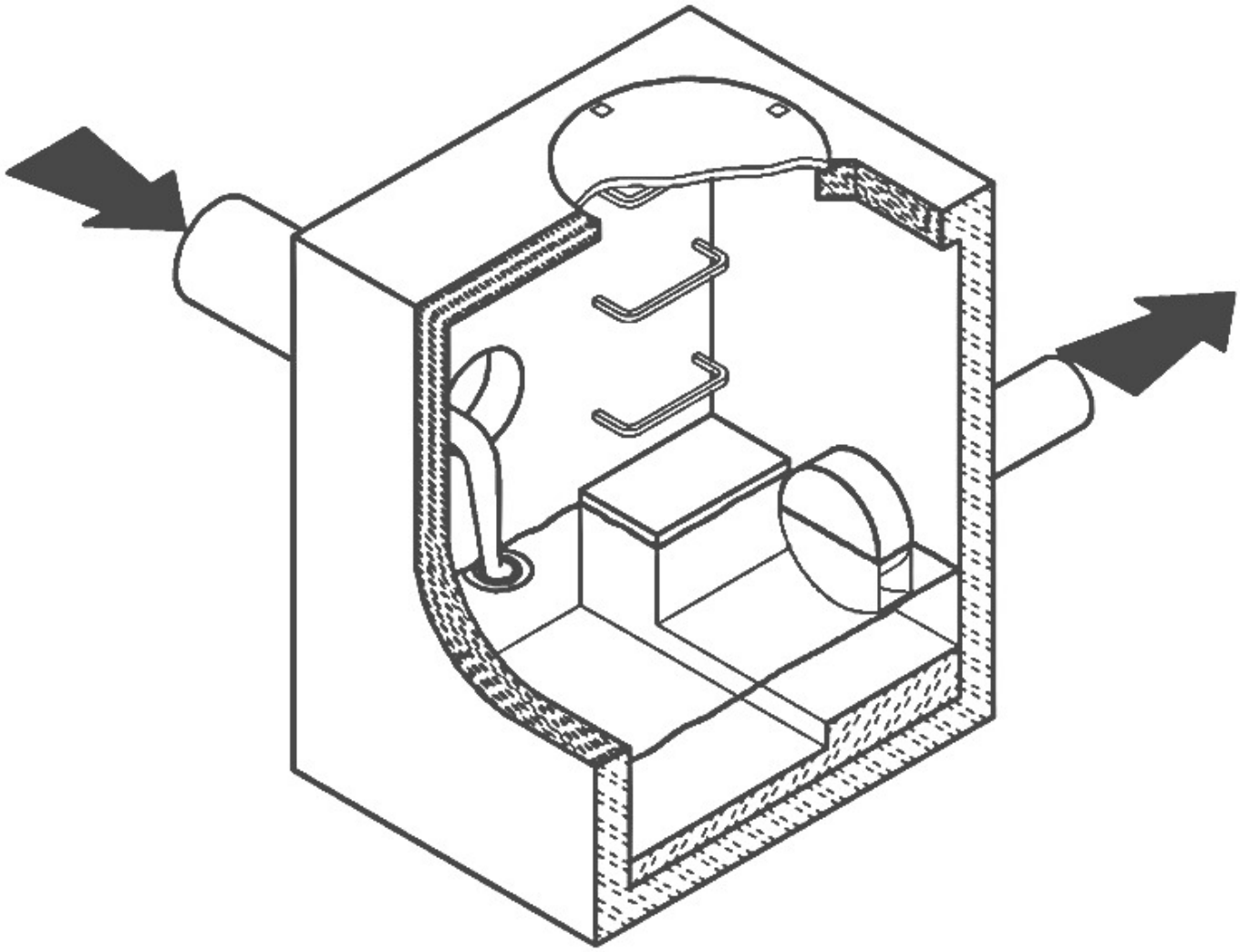

JOHN MEUNIER

APPLICATIONS

One of the major problems of urban wet weather flow management is the runoff generated after a heavy rainfall. During a storm event, uncontrolled flows may overload the drainage system and cause flooding. Sewer pipe wear and network deterioration are increased dramatically as a result of increased flow velocities. In a combined sewer system, the wastewater treatment plant will experience a significant increase in flows during storms, thereby losing its treatment efficiency.

A simple means of managing excessive water runoff is to control excessive flows at their point of origin, the manhole. **John Meunier Inc.** manufactures the **HYDROVEX® VHV / SVHV** line of vortex flow regulators for point source control of stormwater flows in sewer networks, as well as manholes, catch basins and other retention structures.

The **HYDROVEX® VHV / SVHV** design is based on the fluid mechanics principle of the forced vortex. The discharge is controlled by an air-filled vortex which reduces the effective water passage area without physically reducing orifice size. This effect grants precise flow regulation without the use of moving parts or electricity, thus minimizing maintenance. Although the concept is quite simple, over 12 years of research and testing have been invested in our vortex technology design in order to optimize its performance.

The **HYDROVEX® VHV / SVHV** Vertical Vortex Flow Regulators **(refer to Figure 1)** are manufactured entirely of stainless steel, and consist of a hollow body (**1**) (in which flow control takes place) and an outlet orifice (**7**). Two rubber "O" rings (**3**) seal and retain the unit inside the outlet pipe. Two stainless steel retaining rings (**4**) are welded on the outlet sleeve to ensure that there is no shifting of the "O" rings during installation and operation.

1. **BODY**
2. **SLEEVE**
3. **O-RING**
4. **RETAINING RINGS (SQUARE BAR)**
5. **ANCHOR PLATE**
6. **INLET**
7. **OUTLET ORIFICE**

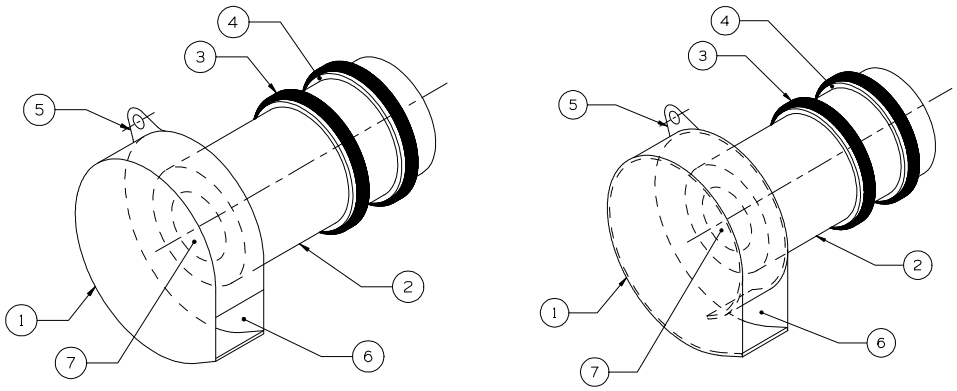

VHV ***SVHV***

FIGURE 1: HYDROVEX® VHV-SVHV VERTICAL VORTREX FLOW REGULATORS

ADVANTAGES

- As a result of the air-filled vortex, a **HYDROVEX® VHV / SVHV** flow regulator will typically have an opening 4 to 6 times larger than an orifice plate. Larger opening sizes decrease the chance of blockage caused by sediments and debris found in stormwater flows. **Figure 2** shows the discharge curve of a vortex regulator compared to an equally sized orifice plate. One can see that for the same height of water and same opening size, the vortex regulator controls a flow approximately four times smaller than the orifice plate.
- Having no moving parts, they require minimal maintenance.
- Submerged inlet for floatables control.
- The **HYDROVEX® VHV / SVHV** line of flow regulators are manufactured entirely of stainless steel, making them durable and corrosion resistant.
- Installation of the **HYDROVEX® VHV / SVHV** flow regulators is quick and straightforward and is performed after all civil works are completed.
- Installation requires no assembly, special tools or equipment and may be carried out by any contractor.

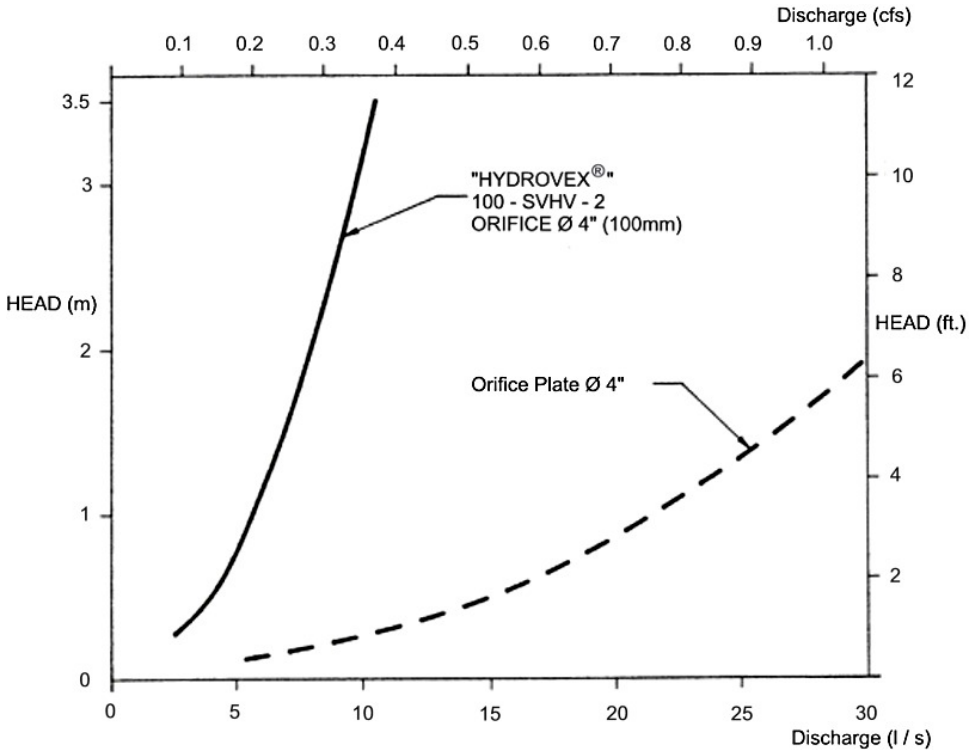

FIGURE 2: DISCHARGE CURVE SHOWING A HYDROVEX® FLOW REGULATOR VS AN ORIFICE PLATE

SELECTION

Selecting a **VHV or SVHV** regulator is easily achieved using the selection chart found at the end of this brochure (refer to **Figure 3)**. Each selection is made using the maximum allowable discharge rate and the maximum allowable water pressure (head) retained upstream from the regulator. The area in which the design point falls will designate the required VHV/SVHV model. The maximum design head is calculated as the difference between the maximum upstream water level and the invert of the outlet pipe. All selections should be verified by a John Meunier Inc. representative prior to fabrication.

Example:

- ✓ Maximum discharge 6 L/s (0.2 cfs)**
- ✓ Maximum design head 2m (6.56 ft.)
- ✓ Using **Figure 3** model required is a **75 VHV-1**

** It is important to verify the capacity of the manhole/catch basin outlet pipe. Should the outlet pipe be >80% full at design flow, the use of an air vent is required.

INSTALLATION REQUIREMENTS

HYDROVEX® VHV / SVHV flow regulators can be installed in circular or square manholes. **Figure 4** lists the minimum dimensions required for each regulator model. ***It is imperative to respect the minimum clearances shown to ensure ease of installation and proper functioning of the regulator.***

SPECIFICATIONS

In order to specify a **HYDROVEX® VHV/SVHV** flow regulator, the following parameters must be clearly indicated:

- The model number (ex: 75-VHV-1)
- The diameter and type of outlet pipe (ex: ø 6", SDR 35)
- The maximum discharge rate (ex: 6.0 L/s [0.21 CFS])
- The maximum upstream head (ex: 2.0 m [6.56 ft]) *
- The manhole diameter (ex: ø 900 mm [ø 36"])
- The minimum clearance "H" (ex: 150 mm [6 in]) as indicated in **Figure 4**
- The material type (ex: 304 stainless steel, standard)

* ***Upstream head is defined as the difference in elevation between the maximum upstream water level and the invert of the outlet pipe where the HYDROVEX® flow regulator is to be installed.***

PLEASE NOTE THAT WHEN REQUESTING A PROPOSAL, WE SIMPLY REQUIRE THAT YOU PROVIDE US WITH THE FOLLOWING INFORMATION:

- ***project design flow rate***
- ***pressure head***
- ***chamber's outlet pipe diameter and type***

Typical HYDROVEX® VHV model

OPTIONS

VHV-1-O
(extended inlet for odor control)

FV–VHV
(mounted on sliding plate for emergency bypass)

VHV with Gooseneck assembly
(manhole without clearance below regulator)

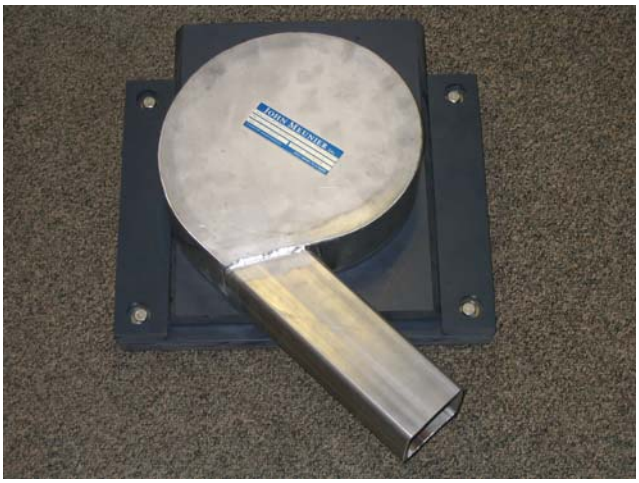

FV–VHV-O
(sliding plate with extended inlet)

VHV with upstream air vent
(applications where outlet pipe is > 80% full at peak flow)

® HYDROVEX®

VHV/SVHV Vortex Flow Regulator

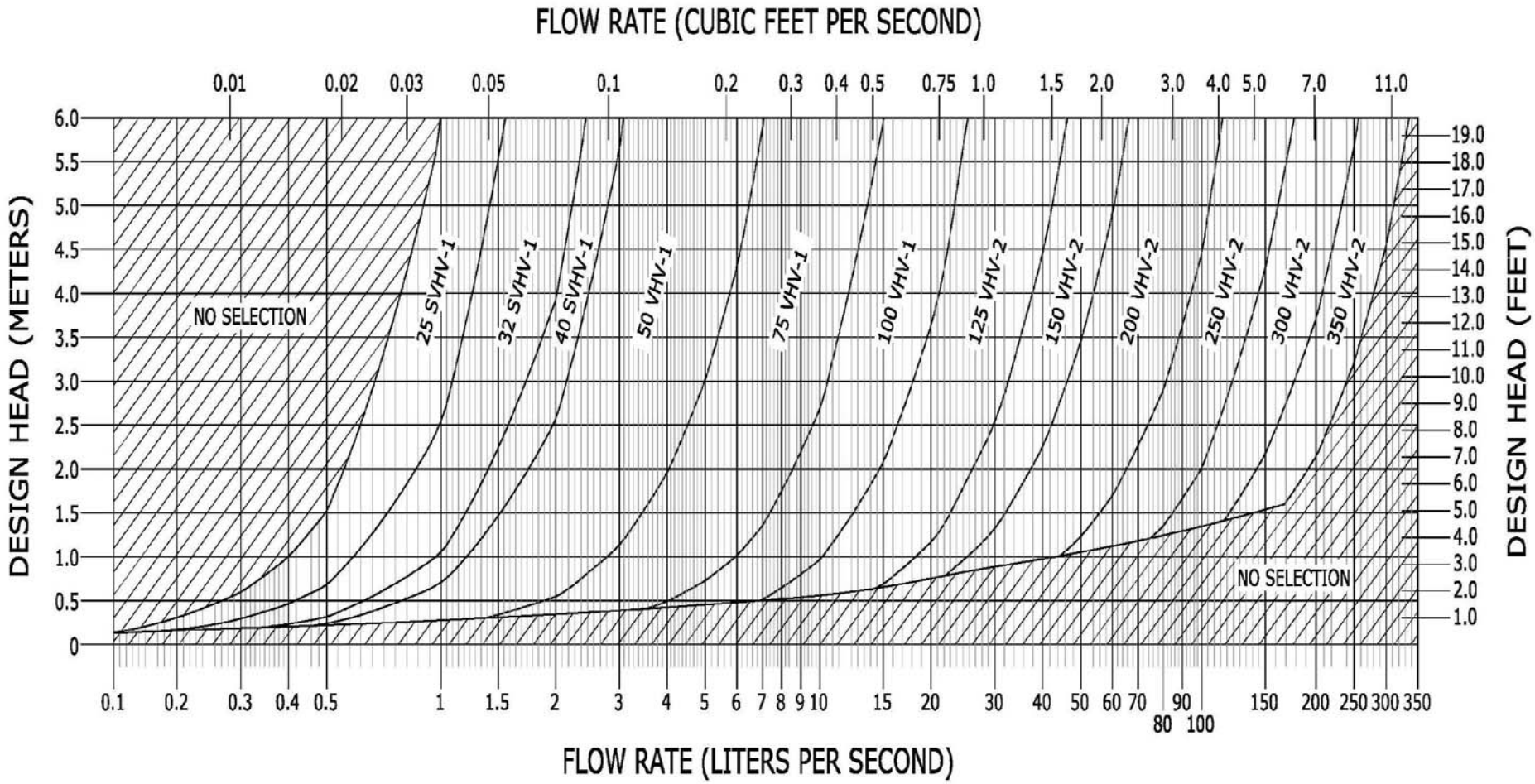

FIGURE 3

JOHN MEUNIER

TYPICAL INSTALLATION OF A VORTEX FLOW REGULATOR IN A CIRCULAR OR SQUARE/RECTANGULAR MANHOLE
FIGURE 4

Model	Regulator Diameter **A** (mm) [in]	**CIRCULAR** Minimum Manhole Diameter **B** (mm) [in]	**SQUARE** Minimum Chamber Width **B** (mm) [in]	Minimum Outlet Pipe Diameter **C** (mm) [in]	Minimum Clearance **H** (mm) [in]
25 SVHV-1	125 [5]	600 [24]	600 [24]	150 [6]	150 [6]
32 SVHV-1	150 [6]	600 [24]	600 [24]	150 [6]	150 [6]
40 SVHV-1	200 [8]	600 [24]	600 [24]	150 [6]	150 [6]
50 VHV-1	150 [6]	600 [24]	600 [24]	150 [6]	150 [6]
75 VHV-1	250 [10]	600 [24]	600 [24]	150 [6]	150 [6]
100 VHV-1	325 [13]	900 [36]	600 [24]	150 [6]	200 [8]
125 VHV-2	275 [11]	900 [36]	600 [24]	150 [6]	200 [8]
150 VHV-2	350 [14]	900 [36]	600 [24]	150 [6]	225 [9]
200 VHV-2	450 [18]	1200 [48]	900 [36]	200 [8]	300 [12]
250 VHV-2	575 [23]	1200 [48]	900 [36]	250 [10]	350 [14]
300VHV-2	675 [27]	1600 [64]	1200 [48]	250 [10]	400 [16]
350VHV-2	800 [32]	1800 [72]	1200 [48]	300 [12]	500 [20]

Circular Manhole

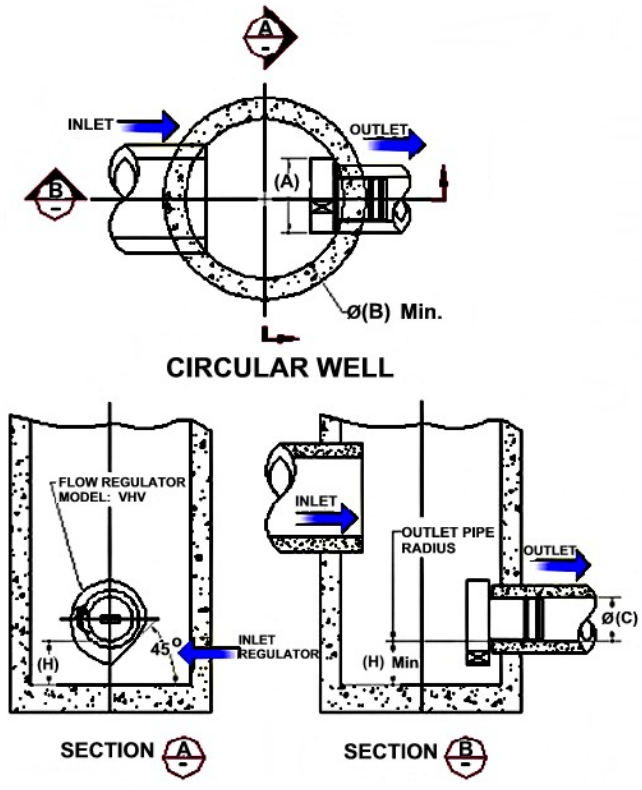

Square / Rectangular Manhole

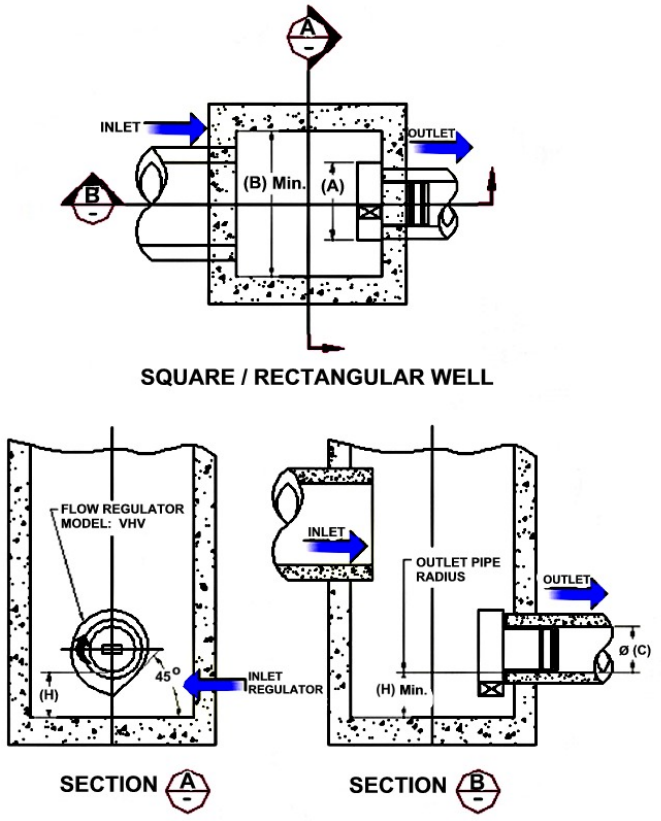

NOTE: ***In the case of a square manhole, the outlet pipe must be centered on the wall to ensure that there is enough clearance for installation of the regulator.***

INSTALLATION

The installation of a **HYDROVEX®** regulator may begin once the manhole and piping are in place. Installation consists of simply sliding the regulator into the outlet pipe of the manhole and securing it to the wall with an anchor (supplied). **John Meunier Inc.** recommends applying a lubricant on the inner surface of the outlet pipe, in order to facilitate the insertion and the manipulation of the flow controller.

MAINTENANCE

HYDROVEX® regulators are designed and manufactured to minimize maintenance requirements. We recommend a periodic visual inspection every 3-6 months (depending on local flow and sediment conditions) in order to ensure that neither the inlet nor the outlet has become blocked with debris. The manhole housing the vortex regulator should be inspected and cleaned with a vacuum truck periodically, especially after major storm events.

GUARANTY

The **HYDROVEX®** line of **VHV / SVHV** regulators are guaranteed against both design and manufacturing defects for a period of 5 years after sale. Should a flow regulator be found to be defective within the guarantee period, **John Meunier Inc.** will modify or replace the defective unit.

John Meunier Inc.
ISO 9001 : 2008

Head Office
4105 Sartelon
Saint-Laurent (Quebec) Canada H4S 2B3
Tel.: 514-334-7230 www.johnmeunier.com
Fax: 514-334-5070 cso@johnmeunier.com

Ontario Office
2000 Argentia Road, Plaza 4, Unit 430
Mississauga (Ontario) Canada L5N 1W1
Tel.: 905-286-4846 www.johnmeunier.com
Fax: 905-286-0488 ontario@johnmeunier.com

USA Office
2209 Menlo Avenue
Glenside, PA USA 19038
Tel.: 412- 417-6614 www.johnmeunier.com
Fax: 215-885-4741 asteele@johnmeunier.com

Revised: 2012-07-23